WOERNER
Lubrication Experts since 1922

Piston pump unit GMO-A02

Technical data sheet



P0904

VERSION 07.2025

IMPORTANT INFORMATION

Important information about this data sheet

Reproduction, also in extracts, only permitted with the approval of the firm of EUGEN WOERNER GmbH & Co. KG.
All the information in this data sheet has been examined for correctness with great care. Nevertheless, WOERNER cannot assume any liability for losses or damage resulting directly or indirectly from the application of the information contained in this data sheet.
All products from WOERNER may only be used as intended and corresponding to the information in this data sheet.
For products supplied with operating instructions, the additional directives and informa-tion contained in them are to be complied with.
Materials deviating from those mentioned in this data sheet and the technical documents which further apply may only be poured into and processed in the appliances and systems manufactured and supplied by WOERNER by following agreement with and written approval by WOERNER.
The safety and danger information stated in the safety data sheets of the substances used must be taken into account at all costs.
Transportation of gases, liquefied gases, gases under pressure, vapours and liquids, the vapour pressure of which is more than 0,5 bar above normal atmospheric pressure
(1013 mbar) at the maximum admissible temperature, of easy inflammable or explosive media as well as transportation of foodstuffs is forbidden.

Information on EU Drective 2011/65/EU (RoHS)

In its controls and switching devices, WOERNER only uses materials which fulfil the criteria of EU Directive 2011/65/EU. To the extent that hexavalent chromium has been used as corrosion protection in the parts which we produce ourselves, it has already been replaced by other environmentally tolerable protective measures.
The mechanical devices supplied by WOERNER are not affected by EU Directive 2011/65/EU. But as WOERNER is conscious of its responsibility towards the environment, we shall also use materials fulfilling the requirements of the Directive for devices not covered by EU Directive 2011/65/EU as soon as they are generally available and their use is technically possible.

ADDITIONAL INSTRUCTIONS

Illustrations

Illustrations in this operating manual are examples to provide a basic understanding of the machine described.

Dimensions

Unless otherwise stated, dimensions are in millimetres.

Copyright

Distribution, reproduction, exploitation and communication of this document and its contents are forbidden unless expressly permitted.
Violations result in compensation for damages.
All rights reserved.

Changes

WOERNER enhances its products constantly. WOERNER reserves the right to adapt the product portfolio, the products and their manufacturing processes and all information in all associated documents at any time without prior notice. Customer-specific agreements are considered. Previous versions of this document are no longer valid upon publication of the latest version.

TABLE OF CONTENTS

TABLE OF CONTENTS 3
ORDER DESIGNATION 4
PRODUCT AND FUNCTIONAL DESCRIPTION 5
TECHNICAL DATA 6
WEIGHT 7
RESERVOIR 8
LEVEL MONITORING 11
FILLING CONNECTOR 13
ATTACHMENT AND CONNECTION OPTIONS 14
ELECTRICAL CONTROL 17
DRIVE MONITORING 24
OPERATING TEMPERATURE 24
ACCESSORIES 24

PISTON PUMP UNIT GMO-A

As pump unit in central lubrication systems

Features and benefits

- For the delivery of oil, liquid grease or grease
- 1 to 3 pump elements
- Up to 44 outlets with progressive distributors flanged-on
- Electric control and monitoring
- Two lubrication circuits separately controllable
- WOERNER Easy Lock eccentric with simple and safe installation of the positively driven pump elements and additional Lube Care function (agitation without conveying)
- Control with intelligent error output
- Optionally with integratet heating and temperature monitoring
- Wide range of reservoir and monitoring options

Circuit diagram

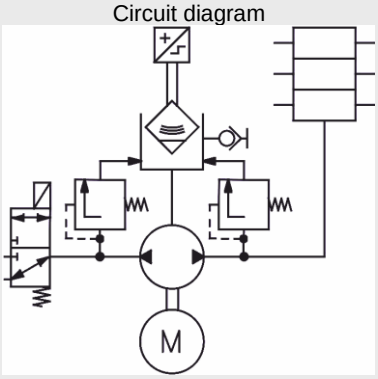

EUGEN WOERNER GmbH & Co. KG

ORDER DESIGNATION

GMO-A 02 [ ] [ ] [ ] [ ] [ ] [ ] [ ] [ ] [ ] [ ] [ ] [ ] [ ]

internal

Reservoir	Level monitoring	Filling connec-tor	Pump element at position 1 | 2 | 3	Connection possibility at position 1 | 3	Electric control	Drive moni-toring	Operating tempe-rature	Supply voltage
See page 8 ff.	See page 11 ff.	See page 13 ff.	See page 14 ff.	See page 14 ff.	See page 17 ff.	See page 24 ff.	See page 24 ff.	See page 6 ff.
Plastic reservoir 2 l | 4 l | 6 l Standard: 2L 4L 6L Outdoor: 2LA 4LA 6LA	**for oil:** Minimum: F Ultrasonic: A D Level switch KFA: K	A	0,04 cm³: 04	Directional control valve [2] up to 350 bar: V…	with: D22 with: D22A without: 0	with: A	Monitoring [3]: T	24 V: 24
Polyester 5 l: 5 10 l: 10 30 l: 30	**for fluid grease** Ultrasonic: AV DV Level switch KFA: KV	C	0,08 cm³: 08	for VPB-SSV up to 350 bar: S…	with: D11 with: D11A		Monitoring and heating [3]: H	
Stainless steel 4 l: 4V 7 l: 7V 25 l: 25V	**for grease:** Minimum: C Ultrasonic [1]: AK DK Level switch KFA [1]: KK	D	0,11 cm³: 11	for VPB-B or VPB-G up to 150 bar: G…	with: D12 with: D12A			
	without: for oil: 0 for (fluid-) grease: 0R	G	0,16 cm³: 16	for pressure limitation pump element up to 350 bar: B…	with: D13	without: 0		230 V: 230
Adapter KX: KX	KX-System: Min.: 1 Min. + warning: 2 without: 0R	without: 0	without: 0	without: 0	without: 0 without: 0UL		without: 0	

[1] Only with reservoir 2LA, 4LA, 6LA, 5, 10 and 30

[2] In combination with monitoring only one directional control valve is possible

[3] only possible with control

Order example: pump unit GMO-A

- Reservoir 4 l
- Level monitoring C
- Filling connector G
- Pump element 11
- Connection possibility at position 1 for VPB-SSV 250 bar
- Electric control D11
- Drive monitoring A
- without operating temperature monitoring
- Supply voltage 230 V

Order designation: GMO-A02 | 00 | 4L | C | G | 11 | S250 | D11 | A | 0 | 230

EUGEN WOERNER GmbH & Co. KG

PRODUCT AND FUNCTIONAL DESCRIPTION

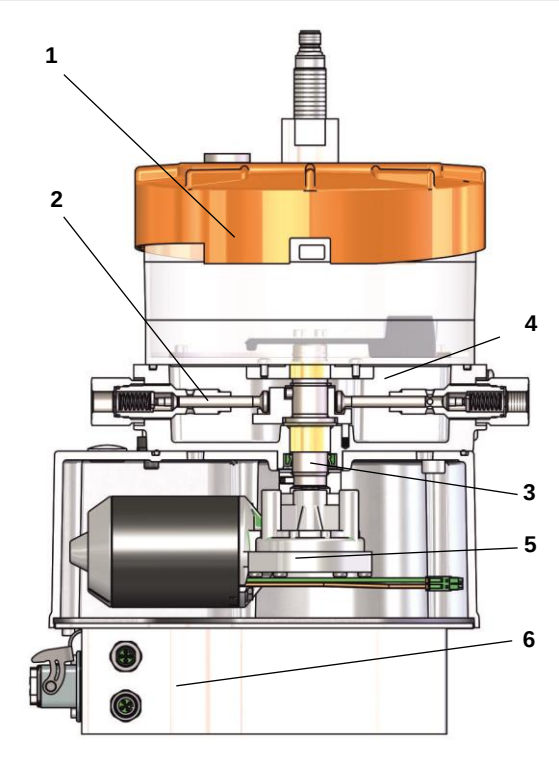

1 Reservoir
2 Delivery piston
3 Eccentric shaft
4 Pump casing
5 Gear motor
6 Power supply unit for 230 V

Drive
The pump unit is driven by a gear motor **5** flanged tot he pump casing **4** from downside.
The pump unit can also be operated with 230 V via an additional housing with a power supply unit **6** under the geared motor.

Conveying function
When the eccentric shaft **3** rotates, the delivery piston **2** of every pump element performs a suction and delivery stroke per rotation each, whilst delivering lubricant from the reservoir **1** to the lubrication points.

WOERNER Easy Lock eccentric with Lube Care

Easy installation of the pump elements
The pump unit GMO-A has a specially designed WOERNER Easy Lock eccentric, which guarantees simple and safe installation of the positively driven pump elements. For assembly, the pump elements are simply screwed in and then hook in automatically with the first eccentric rotation.

Lube Care
Furthermore, the Lube Care function enables an improvement of the lubricant quality and the pumping behaviour by regular agitation of the lubricant. When the eccentric shaft **3** rotates into the one direction of rotation, the pump elements are operating while the stirring device supplies them with the lubricant.
As soon as the eccentric shaft **3** starts to rotate into the other direction, the lubricant is stirred without any delivery operation by the pump elements taking place.

The integrated control allows operating and off-duty periods for both the delivery with and without stirring (Lube care) to be programmed independently from each other.

EUGEN WOERNER GmbH & Co. KG

TECHNICAL DATA

Dimensions

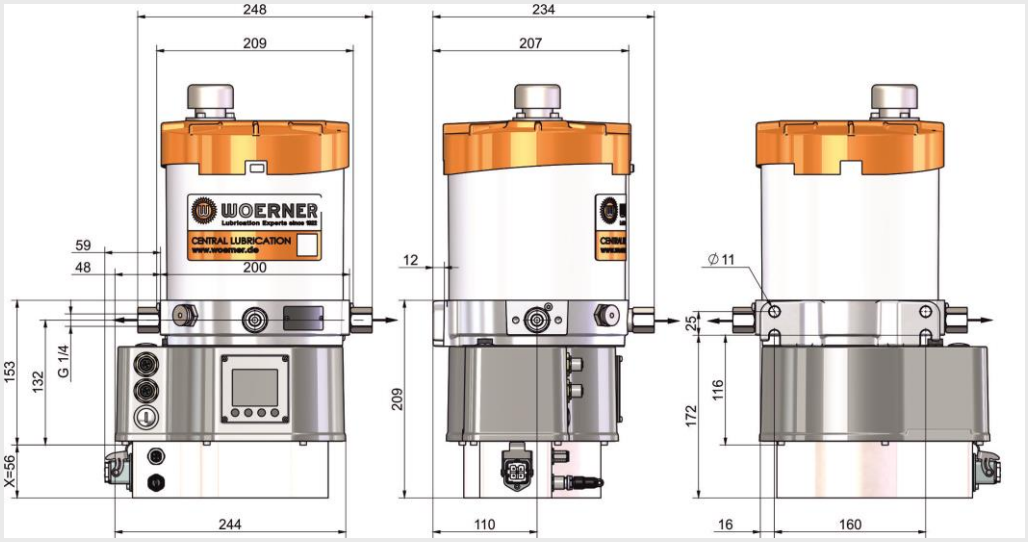

Dimension X=56 Oversize for 230 V supply voltage version

Further dimensions

Attachment an connection options See page 14 ff.

Reservoir See page 8 ff.

Techncal and electrical data

Number of pump elements	1 - 3
Delivery volume per stroke and element	±20% (at an operating viscosity of the pumped liquid of 144 mm²/s and a back pressure of 140 bar))
with pump element 11	0,11 cm³
with pump element 08	0,08 cm³
with pump element 04	0,04 cm³
with pump element 16	0,16 cm³
Delivery pressure	350 bar
Temperature range	-20 - +60 °C
Medium	Oil and grease up to NLGI class 2
Mains voltage	24 VDC 230 V
Power consumption	max. 72 W
Speed (load dependent)	approx. 30 min $^{-1}$
Protection class	DIN EN 60529 IP66/69
Material	
Casing	Aluminium
Pump element	Steel
Motor	Aluminium / Steel / Copper
Gaskets	NBR
Medium contacting parts	FPM
Cover for power supply unit 230 V	Stainless steel

EUGEN WOERNER GmbH & Co. KG

WEIGHT

The weight of the pump unit is made up of the following components, depending on the version:

- Pump body with monitoring and motor
- Progressive distributor | directional control valve
- Reservoir
- Follower piston
- Level monitoring
- Pump elements

All weights in kg

Pump body with monitoring and motor	
Pump with control and motor	5
Pump with control, motor and power supply unit 230 V	8,1
Progressive distributor | directional control valve	
Attachment B | G | S	0,6
Attachment V	1,1

Reservoir (without follower piston)

Material	**Translucent polypropylene**						**Stainless steel**			**Polyester**		
Designation	2L	4L	6L	2LA	4LA	6LA	4V	7V	25V	5	10	30
	0.6	0.7	0.8	0.8	0.9	1.0	1.5	2.5	4.6	1.5	1.95	4.0

Follower piston	
For reservoirs 5 and 10	0.8
For reservoir 30	2.7
For reservoirs 2LA | 4LA | 6LA	1.6
Level monitors	0.2
Pump element 08 | 11 | 16	0,25

EUGEN WOERNER GmbH & Co. KG

RESERVOIR

Reservor 2L | 4L | 6L incl. Screw cap with snap-on function

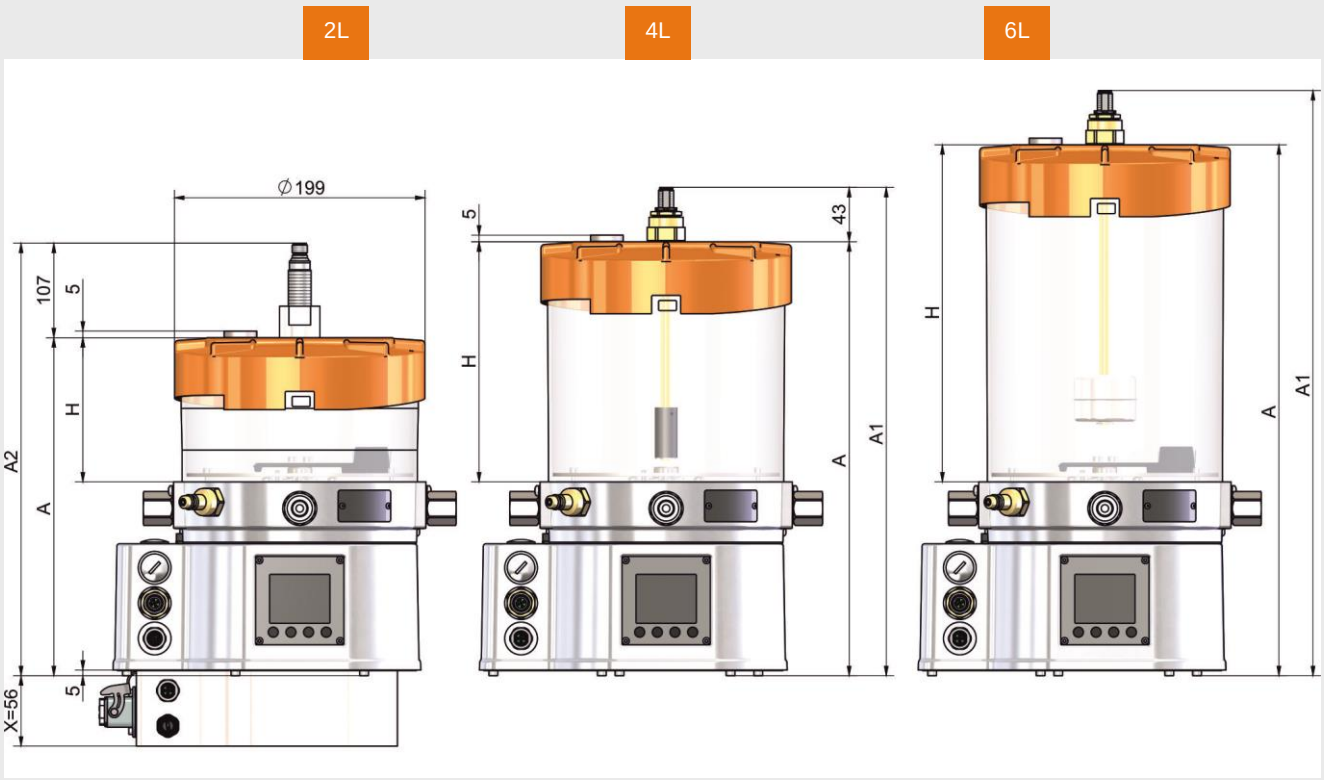

Reservoir	Capacity	Dimensions					Material	
		A	A1	A2	H	X	Reservoir	Lid
2L | 2LA **4L | 4LA** **6L | 6LA**	2 l 4 l 6 l	268 344 421	311 387 464	375 451 528	114 190 267	56	Polypropylene translucent	Polyamide

A = Reservoir without KFA or Ultrasonic
A1 = Reservoir with monitoring KFA
A2 = Reservori with monitoring Ultrasonic
H = Reservoir height
X = Height measurement 230 V version

Outdoor reservoir variants 2LA | 4LA | 6LA for harsh and contaminated environments



1 For oil including filler and ventilation filter
2 For fluid grease and grease with scraper tube
3 For grease with grease follower plate

When selecting the outdoor variants, the exact design of the reservoir is determined by the selected level monitoring.

The fill level is visible.
When a follower piston is used, the usable volume is reduced by approx. 1.1 l.

EUGEN WOERNER GmbH & Co. KG

Differing dimensions

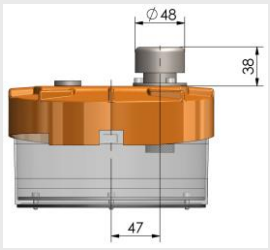

Reservoir 5 | 10 | 30

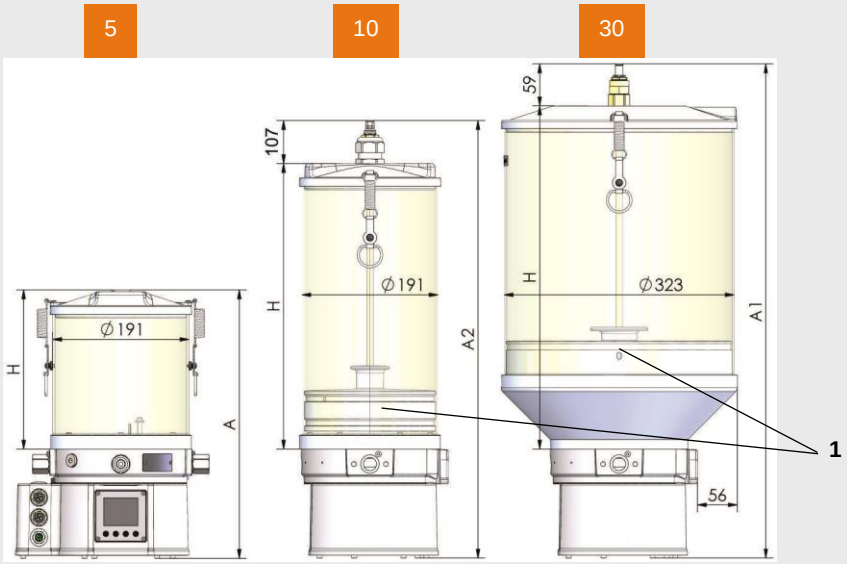

1 Follower piston (optional) made of aluminium

Reservoir	Capacity	Dimensions					Material	
		A	A1	A2	H	X	Reservoir	Lid
5 **10** **30**	5 l 10 l 30 l	377 557 637	434 614 694	484 664 744	224 404 482	56	Polyester/ aluminium	Aluminium

A = Reservoir without KFA or Ultrasonic
A1 = Reservoir with monitoring KFA
A2 = Reservori with monitoring Ultrasonic
H = Reservoir height
X = Height measurement 230 V version
* When combining reservoir 30 and outlet version 14, H and A1 are increased by 33 mm.

When a follower piston is used, the usable volume is reduced
- for 5 and 10 by approx. 2.5 l and
- for 30 by approx. 6 l

EUGEN WOERNER GmbH & Co. KG

Reservoir 4V | 7V | 25V

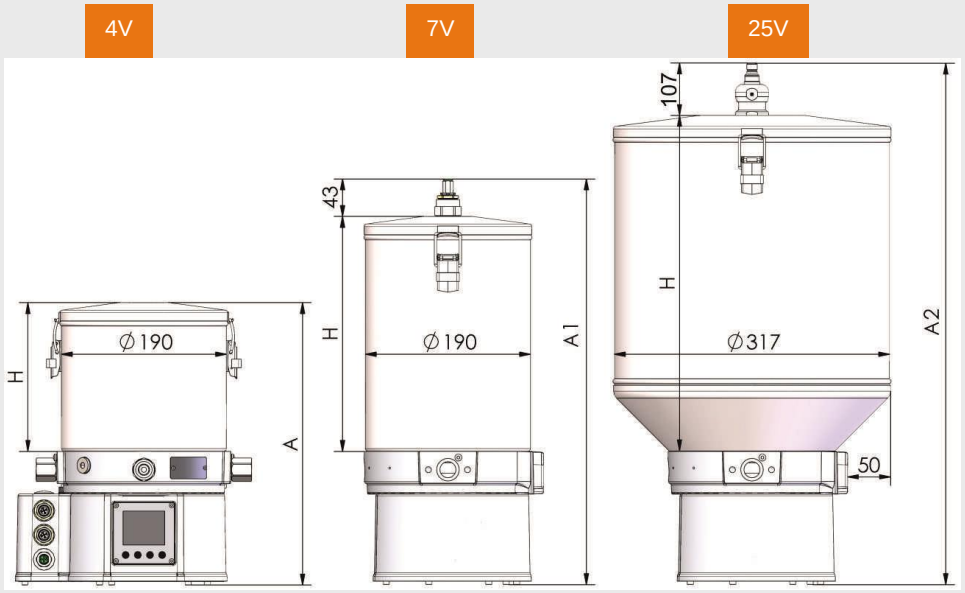

Reservoir	Capacity	Dimensions					Material	
		A	A1	A2	H	X	Reservoir	Lid
4V	4 l	325	368	492	171	56	Stainless steel	Stainless steel
7V	7 l	423	466	530	270			
25V	25 l	540	583	647	386			

A = Reservoir without KFA or Ultrasonic
A1 = Reservoir with monitoring KFA
A2 = Reservori with monitoring Ultrasonic
H = Reservoir height
X = Height measurement 230 V version

Adapter Kx
This version of the machine is equipped with an adapter for a cartridge system.
➡ For further information, see datasheet P0915 and operating manual B0915.

EUGEN WOERNER GmbH & Co. KG

LEVEL MONITORING

Level monitoring minimum controls C | F

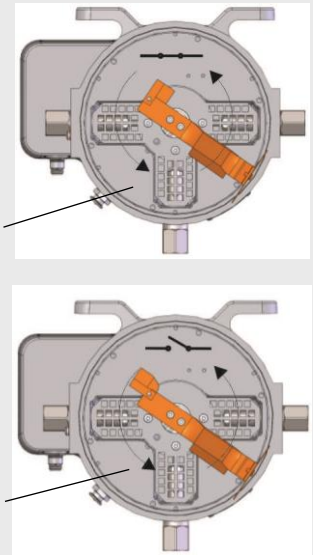

Level monitoring C

C

Minimum level monitoring for liquid grease NLGI class 000 up to grease NLGI class 2

The contact is switched when the reservoir is empty and the pump drive shaft is rotating.
The empty signal is intermittent.
The switching mechanism can move, e.g. when filling the reservoir.
With external control, the signal must therefore be analysed with a delay when the pump is switched on (approx. 5 s).

1 Lubricant available (permanent signal)
2 No lubricant available (intermittent signal)



Level monitoring F

F

Minimum Level monitoring for oil

When the reservoir is empty, the float sinks and a continuous empty signal is emitted.

Level monitor with ultrasonic sensor D | DV | DK | A | AV | AK

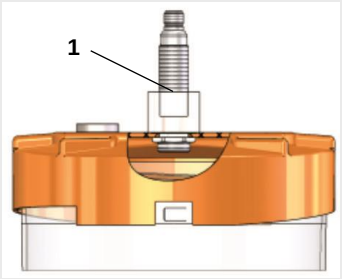

Level monitoring with ultrasonic sensor
Distance measurement of the fill level by reflection of the medium surface.

When monitoring grease levels, the use of a follower piston is strongly recommended. Without a follower piston, the operator/owner must ensure that the grease surface is smooth.

Allows longer switching distances than with level monitoring using level switch KFA (K | KK | KV)

1 Ultrasonic sensor

EUGEN WOERNER GmbH & Co. KG

	Level monitor D DV DK **Digital ultrasonic sensor with two switching points for oil, fluid grease or grease**	**Level monitor** A AV AK **Analogue ultrasonic sensor for oil, fluid grease or grease**
Operating voltage	10 - 30 VDC	10 - 30 VDC
Output type	NC	4 - 20 mA
Output current	max. 100 mA	-
Housing material	PBT/ AISI 316L (DIN 1.4404)	PBT/ AISI 316L (DIN 1.4404)
SP1	Reservoir empty	-
SP2 for reservoirs from 4 l	Reservoir with approx. 25% remaining volume	-
Circuit diagram	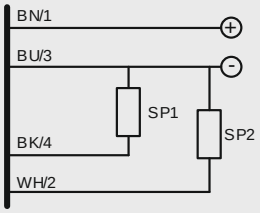	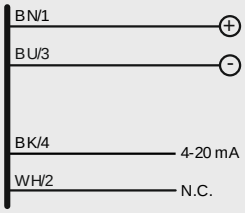

Level monitoring K | KV | KK

Level monitoring with level switch K KV KK	The level monitoring system with level switch KFA offers up to three switching points depending on the reservoir. Minimum Maximum Prewarning When using with grease, a follower piston must be used. A float is used for applications with oil and fluid grease.
Further informations	➡ see data sheet P0496 ➡ see data sheet P0520

Switching capacity	max. 30 W
Switching voltage	max. 30 VDC
Switching current	max. 0,5 A
Protection class	DIN EN 60529 IP65
Connection type	Male M12x1, 5-pin

Circuit diagram for 3 switching points for reservoir size 4L(A) | 4V | 5 | 6L(A) | 7V | 10 l 25V l 30	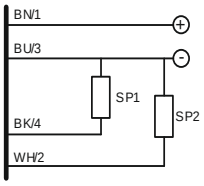	Circuit diagram for 1 switching point for reservoir size 2L(A)	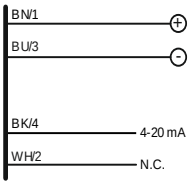

EUGEN WOERNER GmbH & Co. KG

With float K | KV

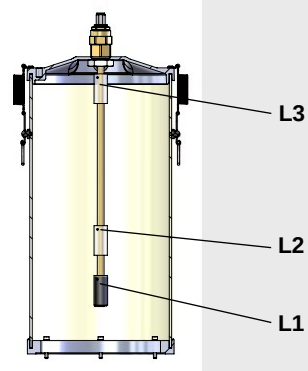

With follower piston KK

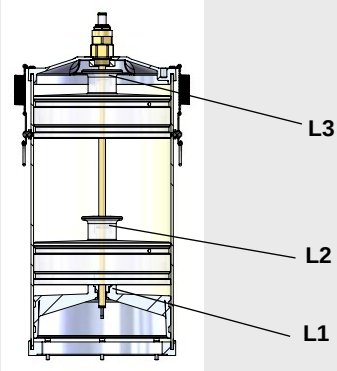

L3 Maximum: Float / follower piston at the top = reservoir is full
L2 Warning: Float / follower piston at approx. 25% remaining usable volume in the reservoir
L1 Maximum: Float / follower piston at the bottom = reservoir is empty

FILLING CONNECTOR



Filling connector A

A

Cone lubricator nipple DIN 71412 - AG1/4
Material: Steel

not suitable for oil

4-jaw hydraulic clutch Connection thread M10x1:

See page 24 ff.



Filling connector C

C

Flat lubricator nipple DIN 3404 - M22
Material: Steel/ Cu

not suitable for oil

Sliding coupling with connection thread G 1/8:

See page 24 ff.

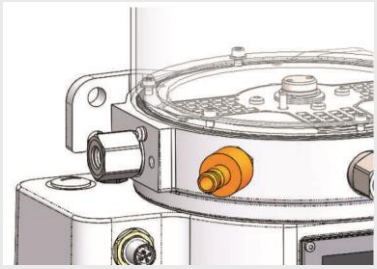

Filling connector **D**

D

Closing nipple DN 6 with dust cap
Material: Steel/ Cu

Locking coupling with connection thread G 1/4i or G 3/8i

See page 24 ff.

EUGEN WOERNER GmbH & Co. KG

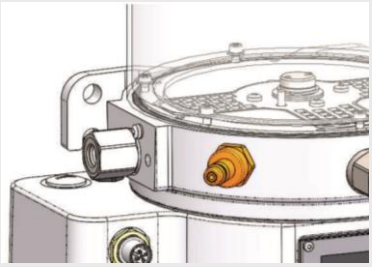

Filling connector G

G

Closing nipple DN 7 with dust cap
Material: CuZn/ Cu

Locking coupling with connection thread G 1/4i

See page 24 ff.

ATTACHMENT AND CONNECTION OPTIONS

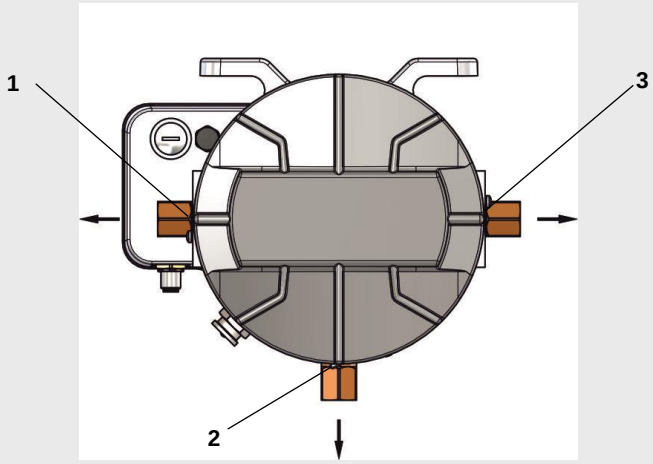

1 Pump element at position 1
Attachment:

B G S V

2 Pump element at position 2

3 Pump element at position 3
Attachment:

B G S V VL

Pump elements:
Up to 3 pump elements can be mounted on the GMO-A pump unit. The position of the pump elements is indicated with position 1 - 3. Pump element connections not required are closed with screw plugs. For easy combining of the pump elements, corresponding screw connection sets can be found in the accessories.

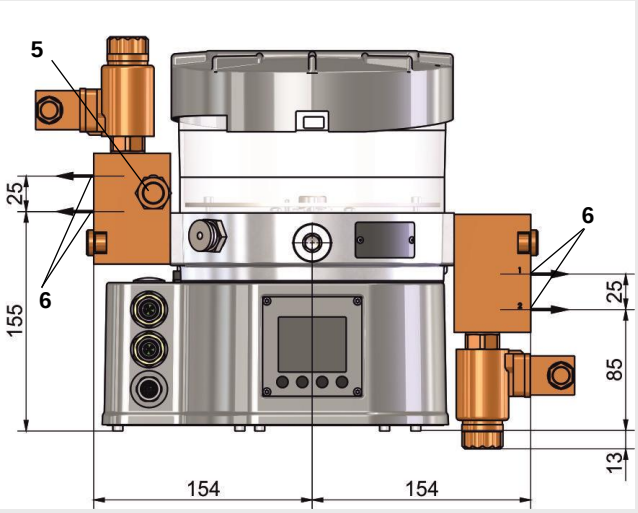

Nominal voltage	24 VDC
Nominal current	1,25 A
Enegized duty rating	100%
Protection class	DIN EN 60529 IP65
Connection type	Male DIN EN 175301-803, shape A

Circuit diagramm pump with directional control valve

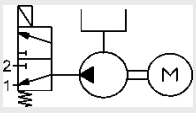

Directional control valve V

V

- A directional control valve with integrated pressure relief valve **5** can be flanged directly to pump element position 1 or 3. This limits the delivery pressure to an optional 350 bar.
- In conjunction with the D22 and D22A control unit, two lubrication circuits can be controlled separately and two progressive distributors can be monitored directly.
- Two directional control valves can be installed on the version without control unit with directional control valve V. Further information for the downward positioning version **VL**:
  ➡ see B0904
- If the reservoirs 30 or 25V are selected in combination with directional control valve V, an attachment is mounted at position 3 with a directional control valve positioned downwards for reasons of space.

5 integrated directional control valve
➡ see section **integrated pressure limitation** in this chapter.

6 Connection G 1/4

EUGEN WOERNER GmbH & Co. KG

Connection options for progressive distributor

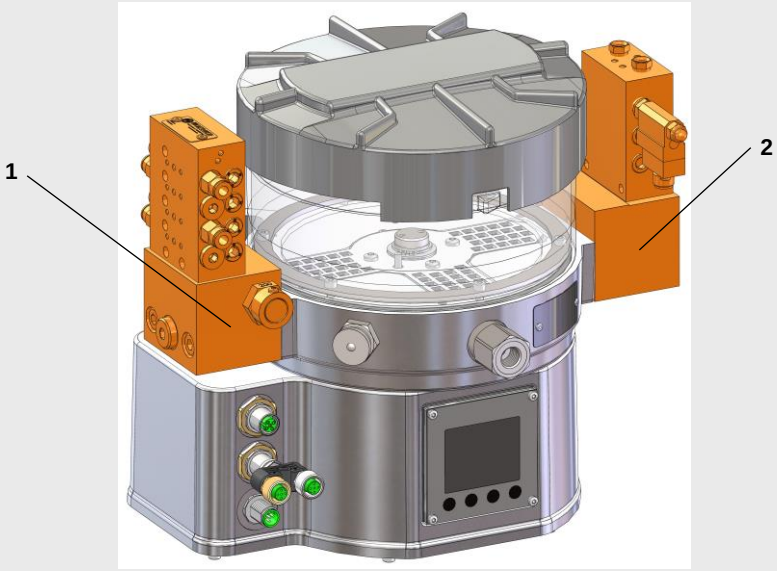

WOERNER progressive distributors can be flange-mounted to the pump elements point 1 and point 3 using an adapter. Progressive distributors with up to 22 points each and different dosing volumes are possible.

The following progressive distributors can be flange-mounted directly:

1 Connection S: S
VPB-SSV ➡ see data sheet P0888.

2 Connection G: G
VPB-B ➡ see data sheet P0378.
VPB-G ➡ see data sheet P0177.

Connection S for VPB-SSV

S

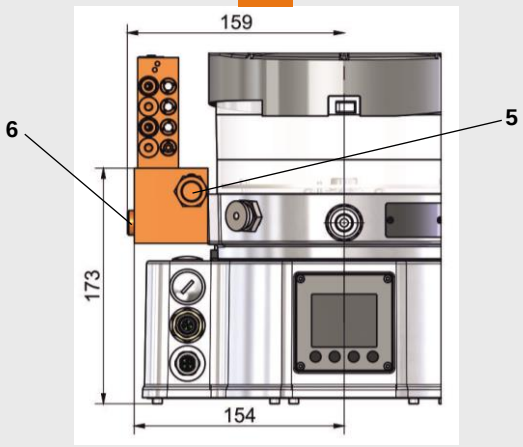

Connection G for VPB-G

G

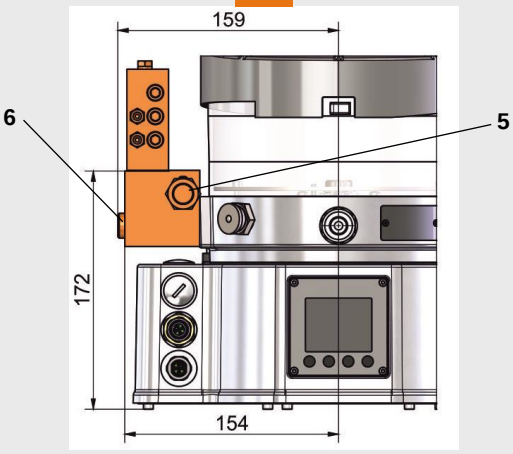

5 integrated directional control valve
➡ see section **integrated pressure limitation** in this chapter.

6 Connection G 1/4

EUGEN WOERNER GmbH & Co. KG

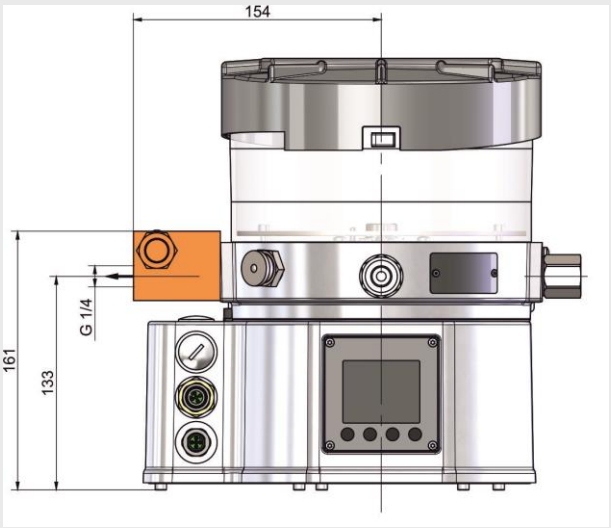

Connection B

B

With integrated pressure relief valve for pump elements.

Öpening pressure
pressure relief valve optionally up to 350 bar.

➡ see section **integrated pressure limitation** in this chapter.

Integrated pressure limitation

All attachment blocks (V + S + G + B) have an integrated pressure limiter **5**, which automatically returns the medium to the reservoir when the maximum pressure is reached

Function

When the maximum pressure of the inserted valve cartridge is reached, the indicator pin **2** (see below) is pushed out and remains in this position until it is pushed in again.
This makes it possible to determine whether the pressure has been exceeded even a long time after pressurisation.
The maximum delivery pressure can also be set afterwards by inserting different valve cartridges.
The following valve cartridges are available:

0 bar (ohne Druckbegrenzung)	100 bar	250 bar
50 bar	150 bar	300 bar
70 bar	200 bar	350 bar

Other opening pressures on request or: HDP-A ➡ see data sheet P0925.

Non-actuated (original state)

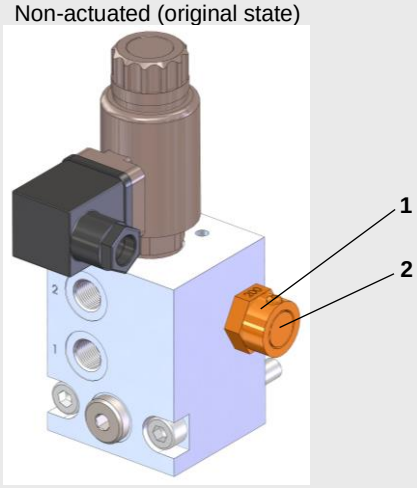

actuated (pressurisation)

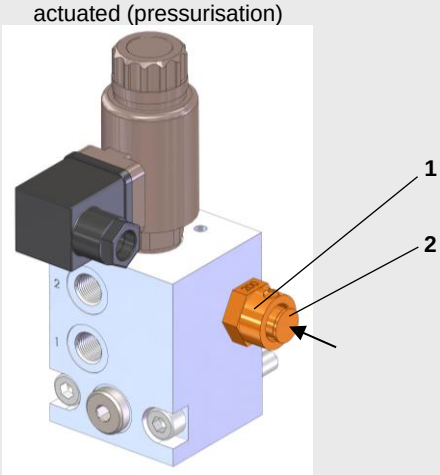

1 Pressure relief valve
2 Indicator pin

Indicator pin **2** is reset to its original state after actuation by pressing manual in the direction of the arrow.

Anschluss G 1/4

The attachment blocks V + G + S have a G1/4 **6** connection for connecting additional accessories. This connection is closed with a screw plug as standard. For example, external pressure relief valves or pressure indicators can be connected.

EUGEN WOERNER GmbH & Co. KG

ELECTRICAL CONTROL

Version without control

There are two different monitoring options:

- Level monitoring
- Drive monitoring

Without electrical control	Version Supply voltage 24 V
0	24

Circuit diagram

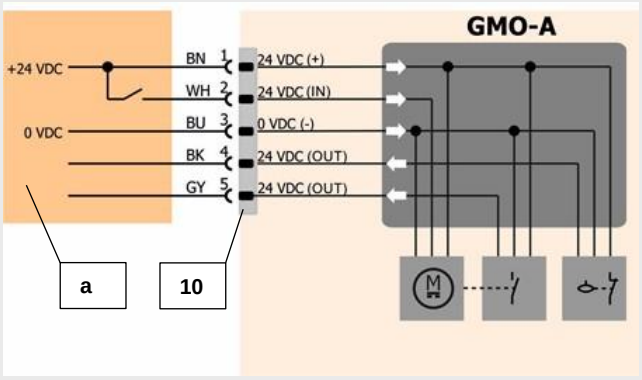

a Customer

10: Male M1x1, 5-pin

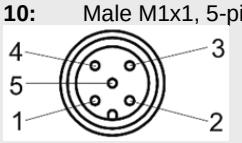

10.2 Agitate
10.4 Level monitoring
10.5 Drive monitoring

Electrical data

Power consumption:	30 W
Power consumption typical: *	max. 60 W
Nominal voltage:	24 VDC
Supply voltage:	11 - 27 VDC
Input voltage:	11 - 27 VDC
Speed (load-dependent):	approx. 30 min $^{-1}$
Level monitoring:	
Switching current	max. 200 mA
Switching function	NC contact
Drive monitoring:	
Switching current	max. 200 mA
Switching function	NO contact

The outputs are short-circuit proof.

*) Power consumption depends on temperature and medium.

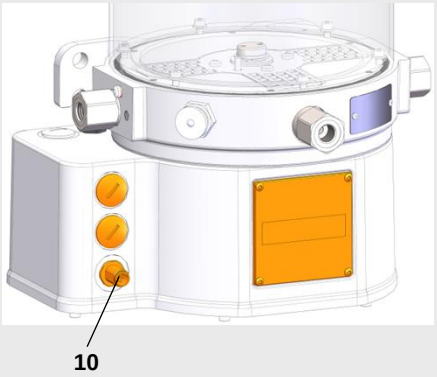

Motor connection
Level monitoring and drive monitoring only active when motor is running.

EUGEN WOERNER GmbH & Co. KG

Without electrical control	Version Supply voltage 230 V
0	230

Circuit diagram

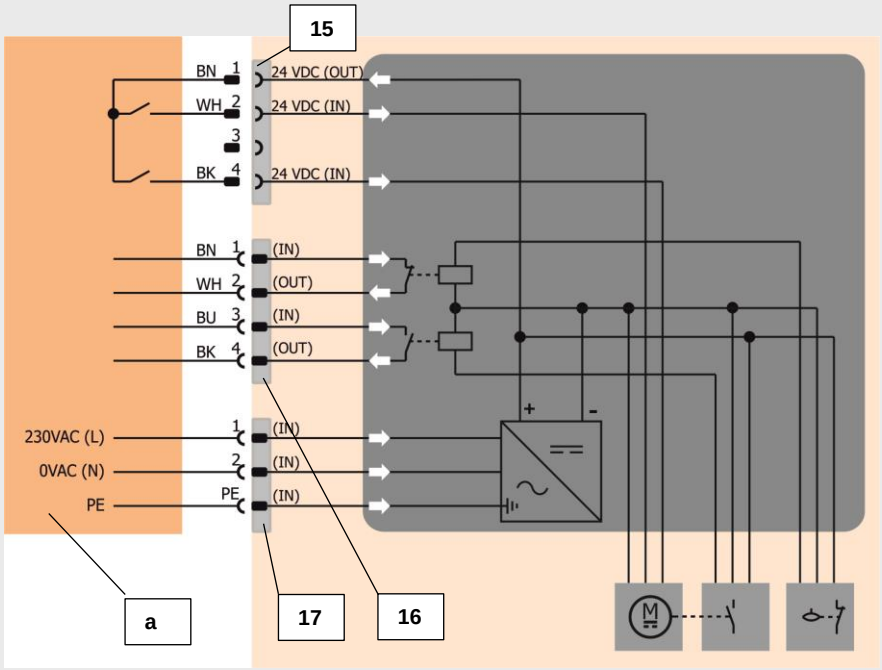

a Customer

15: Female M12x1, 4-pin

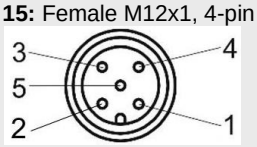

15.2 Agitate (Input)
15.4 Convey (Input)

16: Male M12x1, 5-pin

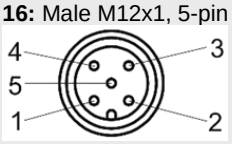

16.1 + 16.2
Level monitoring (Potential-free output contact)
16.3 + 16.4
Drive monitoring (Potential-free output contact)

17: Supply line: Power supply unit 230 VAC connector plug

Electrical data

Power consumption:	40 VA
Power consumption typical: *	max. 100 VA
Nominal voltage:	230 VAC/ 50 Hz
Supply voltage:	100 - 240 VAC/ 50 - 60 Hz
Input voltage:	24 VDC
Speed (load-dependent):	approx. 30 min $^{-1}$
Level monitoring:	
Switching current	max. 6 A
Switching function	NC contact
Drive monitoring:	
Switching current	max. 6 A
Switching function	NO contact

The outputs are short-circuit proof.
*) Power consumption depends on temperature and medium.

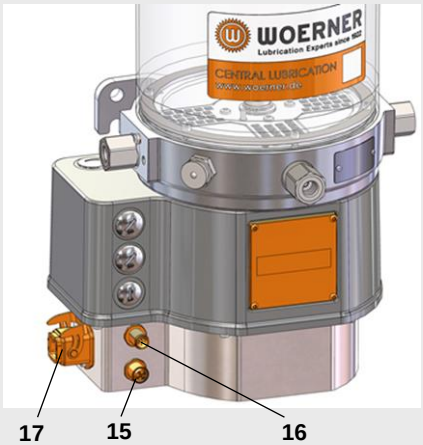

AC connection
Potential-free version of the signal contacts
Level monitoring and drive monitoring only when power supply is active

Required connection cables	See page 24 ff.

EUGEN WOERNER GmbH & Co. KG

Version with control

The control is used for monitoring and actuating the pump unit.
It is able to switch the pump on and off both depending on time and load.

Different monitoring options

- Level monitoring
- Drive monitoring
- Function of 3 progressive distributors
- Operating temperature monitoring Medium

Further functions:

- The pump can be used and programmed for 2 separate lubrication circuits via an optional directional control valve.
- The medium temperature can be regulated via an optionally installed heater.
- As an interface to a higher-level system, the control unit has one input (wiring is mandatory) and 2 outputs. Various commands and status messages can be exchanged by means of continuous signals or pulse sequences.

Further informations

➡ see Operating instructions GMO-A02.

Electrical control

D11 | D12 | D13 | D22

Version Supply voltage 24 V

24

Circuit diagram

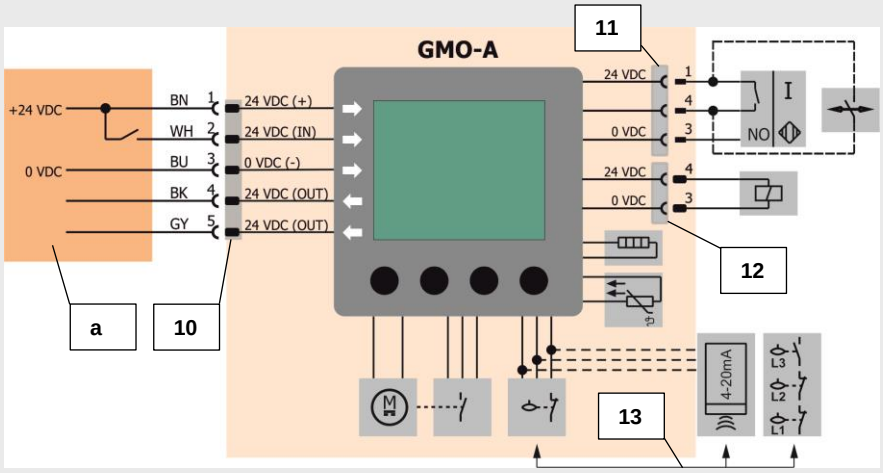

a Customer

10: Male M12x1, 5-pin

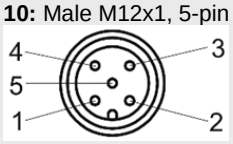

Power supply (motor control)

11 + 12: Female M12x1, 4-pin

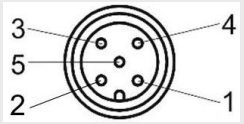

13: Cable gland for level monitoring

Electrical data

Power consumption standby:	0,5 W
Power consumption typical: *	30 W
Power consumption:	max. 67,5 W/ 96 W (D22 control)
Nominal voltage:	24 VDC
Supply voltage:	11 - 27 VDC
Input voltage:	11 - 27 VDC
Output 1 and 2:	max. 200 mA/ 5 W

The outputs are short-circuit proof.

*) Power consumption depends on temperature and medium.

EUGEN WOERNER GmbH & Co. KG

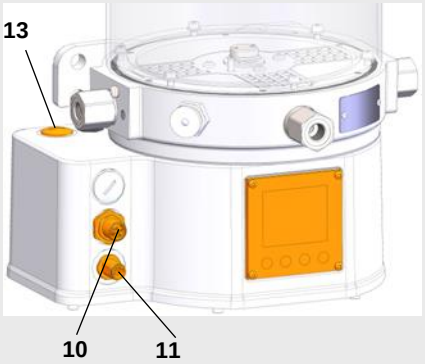

Version control D11

D11

Possibility of monitoring 1 progressive distributor:
Distributor 1:

- Master (Stop conveying in pulse mode)

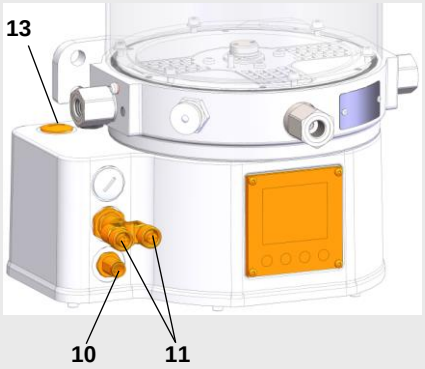

Version control D12

D12

Possibility of monitoring up to 2 progressive distributors:
Distributor 1:

- Master (Stop conveying in pulse mode)

Distributor 2:

- Slave (Monitoring the distributor circulation)

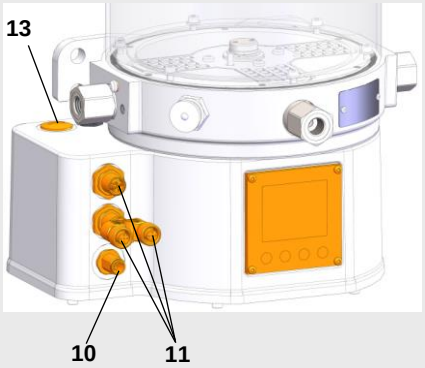

Version control D13

D13

Possibility of monitoring up to 3 progressive distributors:
Distributor 1:

- Master (Stop conveying after distributor circulation in pulse mode)

Distributor 2 and 3:

- Slave (Monitoring the distributor circulation)

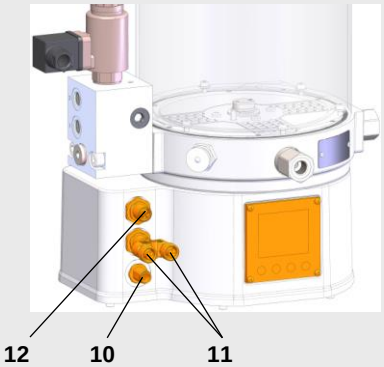

Version control D22

D22

For controlling 2 lubrication circuits via the directional control valve V and monitoring2 progressive distributors:
Distributor 1 and 2:

- Master (Stop conveying after distributor circulation in pulse mode)

EUGEN WOERNER GmbH & Co. KG

Electrical control

D11 | D12 | D13 | D22

Version Supply voltage 230 V

230

Circuit diagram

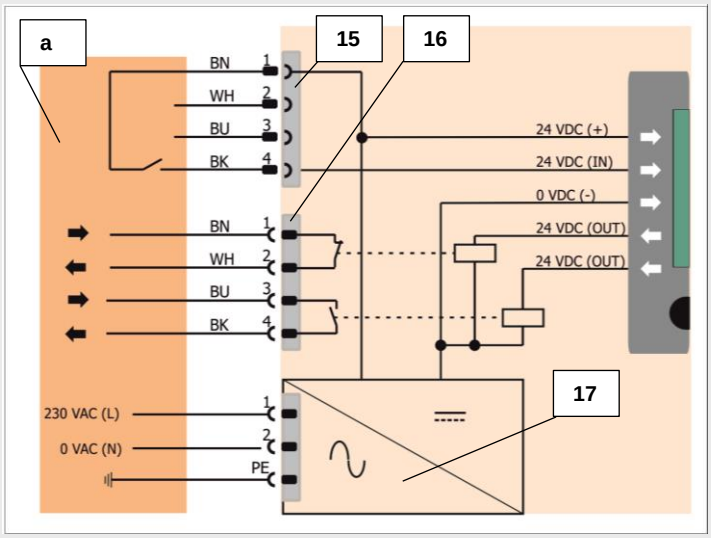

a Customer

15 + 16: Female M12x1, 4-pin

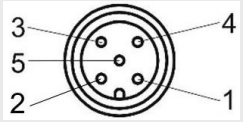

15.4 Release input

16: Male M12x1, 5-pin

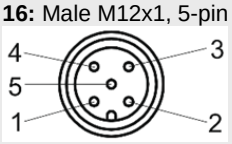

16.1 + 16.2
Output 1 (Potential-free output contact)

16.3 + 16.4
Output 2 (Potential-free output contact)

17: Supply line: Power supply unit 230 VAC connector plug

Electrical data

Power consumption standby:	1 VA
Power consumption typical: *	40 VA
Power consumption:	max. 75 VA/ 120 VA (D22 Steuerung)
Nominal voltage:	230 VAC/ 50 Hz
Supply voltage:	100 - 240 VAC/ 50 - 60 Hz
Input voltage:	24 VDC
Output 1 and 2:	Potential-free, max. 6 A

The outputs are short-circuit proof.

*) Power consumption depends on temperature and medium.

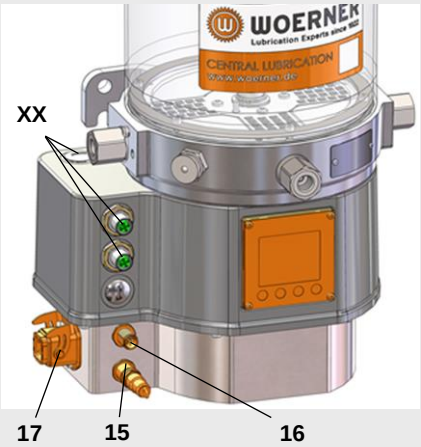

Pin assignment **XX** (11, 12, 13) for versions D11 | D12 | D13 | D22 as for version 24

Required connection cables

See page 24 ff.

EUGEN WOERNER GmbH & Co. KG

Electrical control
D22A

Version Supply voltage 24 V
24

Circuit diagram

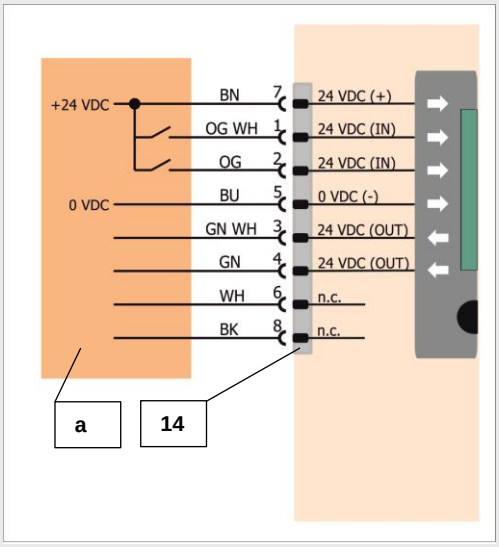

a Customer

14: Male M12 Power, 8-pin, Y-coded

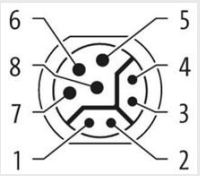

14.1 Release 1 (Input 1)
14.2 Release 2 (Input 2)
14.3 Output 1
14.4 Output 2

Electrical data

Power consumption standby:	0,5 W
Power consumption typical: *	30 W
Power consumption:	max. 96 W
Nominal voltage:	24 VDC
Supply voltage:	11 - 27 VDC
Input voltage:	11 - 27 VDC
Output 1 and 2:	max. 200 mA/ 5 W

The outputs are short-circuit proof.
*) Power consumption depends on temperature and medium.

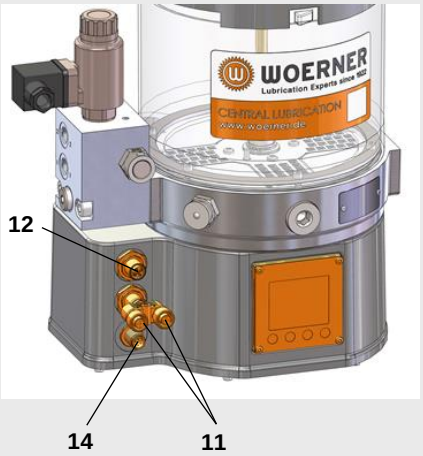

For controlling 2 separate lubrication circuits via the directional control valve V and monitoring 2 progressive distributors:Verteiler 1 und 2:

■ Master (Stop conveying after distributor circulation in pulse mode)

Pin assignment 11 and 12 for version D22 as for version D11 | D12 | D13 | D22 version supply voltage 24 V

EUGEN WOERNER GmbH & Co. KG

Electrical control
D22A

Version Supply voltage 230 V
230

Circuit diagram

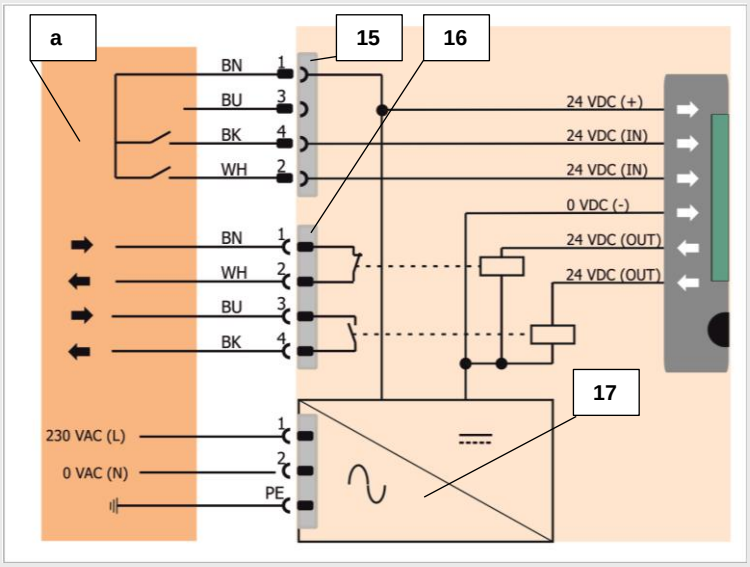

a Customer

15 + 16: Female M12x1, 4-pin

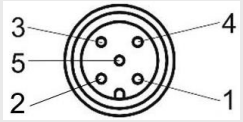

15.2 Release 2 (Input 2)
15.4 Release 1 (Input 1)

16: Male M12x1, 5-pin

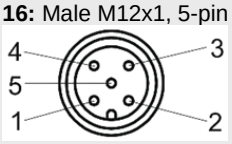

16.1 + 16.2
Output 1 (Potential-free output contact)
16.2 + 16.3
Output 2 (Potential-free output contact)

17: Supply line: Power supply unit 230 VAC connector plug

Electrical data

Power consumption standby:	1 VA
Power consumption typical: *	40 VA
Power consumption:	max. 120 VA
Nominal voltage:	230 VAC/ 50 Hz
Supply voltage:	100 - 240 VAC/ 50 - 60 Hz
Input voltage:	24 VDC
Output 1 and 2:	Potential-free, max. 6 A

The outputs are short-circuit proof.
*) Power consumption depends on temperature and medium.

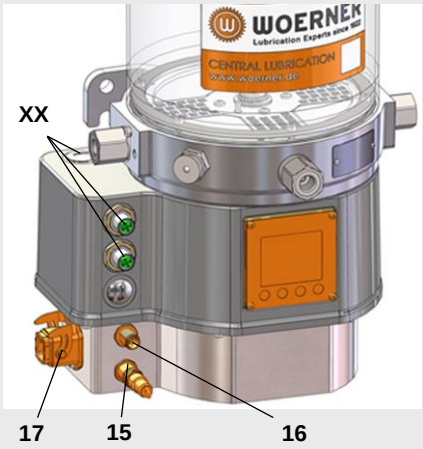

Pin assignment **XX** (11, 12, 13) for version D22A as for version D11 | D12 | D13 | D22 version supply voltage 24 V

Required connection cables

See page 24 ff.

EUGEN WOERNER GmbH & Co. KG

Without electrical control UL version 0UL Supply voltage 24 | 230 V	All electrical components certified to UL ➡ see Operating instructions B0904
Electrical Control D11A Supply voltage 24 | 230 V	For actuating of 2 separate lubrication programmes and monitoring of 1 progressive distributor ➡ see Operating instructions B0904
Electrical Control D12A Supply voltage 24 | 230 V	For actuating of 2 separate lubrication programmes and monitoring of 2 progressive distributor ➡ see Operating instructions B0904

DRIVE MONITORING

With a rotating eccentric shaft, an NC contact signal is output for each full revolution. In combination with the control unit, control is possible via eccentric rotations and thus precise and time-independent dosing of the pump elements. The duration of a revolution is also monitored.

Switching current	max. 200 mA
Switching function	NC contact

OPERATING TEMPERATURE

T H

When selecting T or H (only in combination with control):
The temperature monitoring or heating is integrated in the pump housing.

- If T is selected, the operation of the pump is monitored in an adjustable temperature range and the temperature is displayed.
- If H is selected, the functions of T are supplemented by a heating element which heats the medium in the suction area of the pump.

ACCESSORIES

Pressure relief cartridges

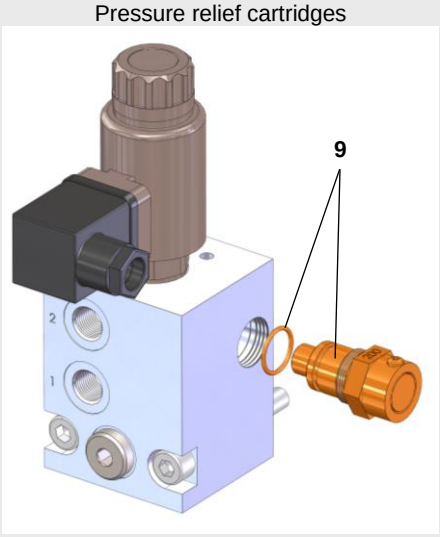

9 Preseeure relief valve
Order no. ➡ see table

Pressure relief valve at the pump element

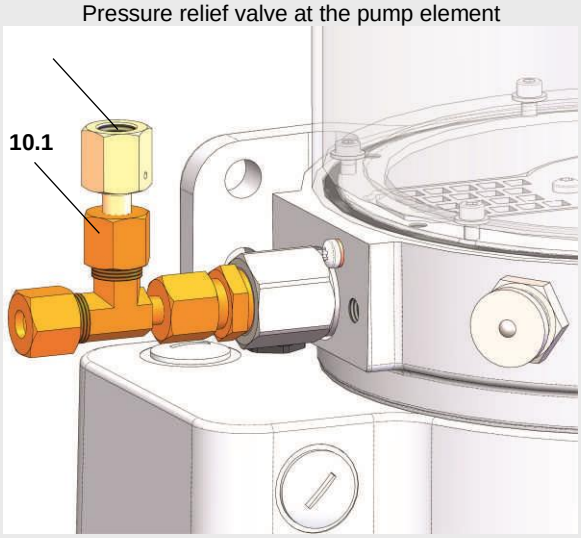

10 Pressure relief valve
10.1 screwing kit
Order no. ➡ see table

EUGEN WOERNER GmbH & Co. KG

Pressure relief valve:

Pos.	Designation	Order no.
	Pressure relief cartridges in attachment blocks V | S | G | B	
9	Pressure relief valve 0 bar	**112.734-65K**
	Pressure relief valve 50 bar	**112.739-61**
	Pressure relief valve 70 bar	**112.739-62**
	Pressure relief valve 100 bar	**112.739-63**
	Pressure relief valve 150 bar	**112.739-64**
	Pressure relief valve 200 bar	**112.739-65**
	Pressure relief valve 250 bar	**112.739-66**
	Pressure relief valve 300 bar	**112.739-67**
	Pressure relief valve 350 bar	**112.739-68**
	Pressure relief valves at pump element For operating pressure delimitation, pressure relief valves **10** can be connected to the pump element using screw fitting sets **10.1**.	
10	Pressure relief valve 70 bar	**112.470-65**
	Pressure relief valve 150 bar	**112.472-65**
	Pressure relief valve 250 bar	**112.473-65**
	Pressure relief valve 300 bar	**112.469-67**
	Pressure relief valve 350 bar	**112.469-65**
	Pressure relief valve customized setting 50 - 160 bar	**112.474-65**
	Pressure relief valve customized setting 160 - 300 bar	**112.475-65**
10.1	Screwing kit for pipe outlet ø6	**112.750-65**
	Screwing kit for pipe outlet ø8	**112.751-65**
	Screwing kit for pipe outlet ø10	**112.752-65**

Piping

Description

The outlets of the pump unit can be combined in a simple manner using the listed pipe and fitting sets.
External outlets:
See figure **11.2** image without attachment.
Internal outlets:
To the various attachment blocks see figure **11.3** image with attachment.
Two pump elements are to be combined:
they must be mounted at adjacent positions (position 1 and 2 or position 2 and 3).
Assembly dimensions to the side and front:
Approx. 54 mm see image upper position.

without attachment

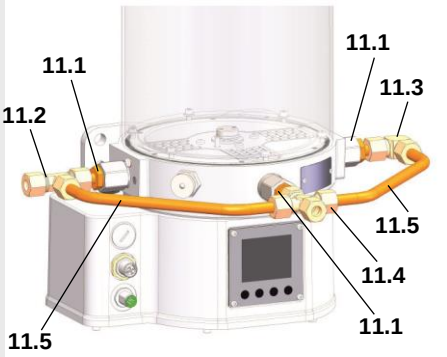

with attachment

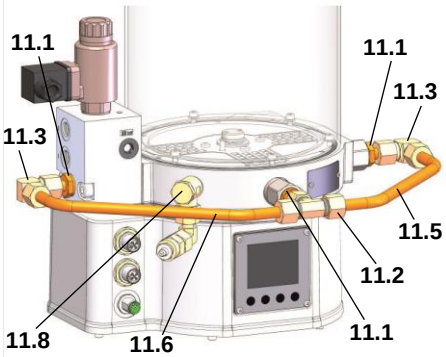

upper position

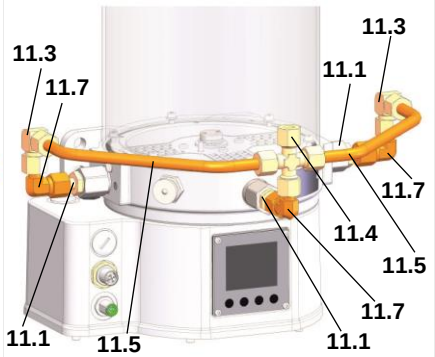

11.1	Screw-in socket LR-10R	| Order no.	**951.900-03**
11.2	T-fitting L-T 10	| Order no.	**950.400-13**
11.3	Angle screw connection L-W 10	| Order no.	**950.300-13**
11.4	Cross screw connection L-K 10	| Order no.	**950.500-13**
11.5	Pipe, pump element to pump element	| Order no.	**112.720-45**
11.6	Pipe, attachment to pump element	| Order no.	**112.720-46**
11.7	Angle screw connection EVW 10	| Order no.	**952.512-10**
11.8	Screw connection kit filling connection	| Order no.	**112.720-61**

Mounting accessories

EUGEN WOERNER GmbH & Co. KG

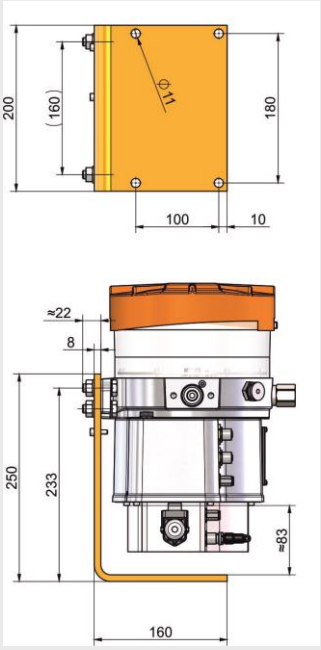

Mounting bracket for floor mounting with mounting material for pump.

Order no. **112.757-64**

Accessories for filling connectors

Designation		Image	Order no.
G	Locking coupling (p_{max} = 35 bar) Connection thread G 1/4i	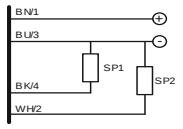	**110.128-65K**
C	Sliding coupling Connection thread G 1/8	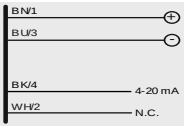	**949.401-05**
A	M10x1 4-jaw hydraulic clutch		**954.004-56**
D	Locking coupling (p_{max} = 200 bar), G 3/8i Locking coupling (p_{max} = 200 bar), G 1/4i		**110.135-66K** **110.135-65K**

EUGEN WOERNER GmbH & Co. KG

Accessories connecting cable

Connection cable for electrical function monitoring progressive distributor to the control:	
Cable length 0,2 m	**913.405-71**
Cable length 0,6 m	**913.405-23**
Cable length 2,0 m	**913.405-06**
Cable length 5,0 m	**913.405-50**
Other cable lengths available on request.	

Electrical data connection cable	
Operating voltage:	max. 30 VDC
Cable diameter:	4x0,34 mm²
Protection class:	DIN EN 60529 IP67
Connection type:	Male/female both-sided M12x1, 4-pin

Accessories connection cable

Designation	**Order no.**
Cable for electrical connection M12x1, 5-pin/ 0°	
Cable length 5 m	**913.406-13**
Cable length 10 m	**913.406-14**
Cable length 15 m	**913.406-15**
Other cables with different lengths on request	
Electrical data **Cable for monitoring**	
Operating voltage	10 - 30 VDC
Cable cross-section	5x0.34 mm²
Protection class	DIN EN 60529 IP 67
Connection type	Socket

Designation	**Order no.**
Connection cable for power supply M12, 8-pin/ 0°/ Y- coded/ shielded	
Cable length 15 m Other cable lengths available on request.	**913.406-80**
Electrical data	
Operating voltage	50 VUC
Protection class	DIN EN 60529 IP 67
Connection type	Female

Technical documents also valid for this product:

No.	Language	Documentation	Device
B0904	EN	Operating instruction	GMO-A
E0904	EN	Spare parts	GMO-A
E0932	EN	Spare parts	Reservoir

HOW YOU CAN REACH US

EUGEN WOERNER GmbH & Co. KG
Hafenstrasse 2, 97877 Wertheim
Deutschland

info@woerner.de

+49 9342 803-0

www.woerner.de

WOERNER
Lubrication Experts since 1922

WOERNER Startseite

WOERNER Kontakte