Blocked for new application / Für Neuanwendung gesperrt

RE 17335
Edition: 2021-07
Replaces: 2017-07

rexroth
A Bosch Company

Hydraulic cylinder
Mill type

Series CDH2 / CGH2 / CSH2



H4652_d

- Component series 3X
- Nominal pressure 250 bar (25 MPa)

Features

- Standards: DIN 24333, ISO 6022
- 6 types of mounting
- Piston Ø (**ØAL**): 40 ... 320 mm
- Piston rod Ø (**ØMM**): 25 ... 220 mm
- Stroke lengths up to 6 m
- Self-adjusting and adjustable end position cushioning
- IO-Link interface, optional

Project planning software
Interactive Catalog System
www.boschrexroth.com/mill-type-cylinder

Contents

Features	1
Contents	1
Ordering code series CDH2	2 ... 4
Ordering code series CGH2	5 ... 7
Ordering code series CSH2	8 ... 10
Technical data	11 ... 15
Overview types of mounting: Series CDH2 / CSH2	16
Overview types of mounting: Series CSH2	17
Swivel eye at base CDH2: MP3	18, 19
Self-aligning clevis at base CDH2: MP5	20, 21
Round flange at head CDH2/CGH2: MF3	22, 23
Round flange at base CDH2: MF4	24, 25
Trunnion mounting CDH2/CGH2: MT4	26, 27
Foot mounting CDH2/CGH2: MS2	28, 29
Swivel eye at base CSH2: MP3	30, 31
Self-aligning clevis at base CSH2: MP5	32, 33
Round flange at head CSH2: MF3	34, 35
Round flange at base CSH2: MF4	36, 37
Trunnion mounting CSH2: MT4	38, 39
Foot mounting CSH2: MS2	40, 41
Flange ports	42, 43
Subplates for valve mounting	44 ... 47
Bleeding / measuring coupling	48
Throttle valve	48
Proximity switch	49 ... 51
Position measurement system	52, 53
Profibus	54, 55
IO-Link, Profinet	56 ... 58
Plain clevis CSA	59
Plain clevis CGA	60
Swivel head CGAK	61, 62
Swivel head CGAS (clampable)	63, 64
Buckling	65
Admissible stroke length	66 ... 67
End position cushioning	68 ... 70
Selection criteria for seals	71
Seal kits	72 ... 76
Tightening torques	77
Components	78 ... 81
Cylinder weight	82
Corrosivity categories	83

Blocked for new application / Für Neuanwendung gesperrt

Ordering code series CDH2

01	02	03		04		05		06	07	08		09	10	11	12	13	14	15	16
CD	H2		/		/		/		A	3X	/								

01	Differential cylinder	**CD**
02	Series	**H2**

Types of mounting

03	Swivel eye at base	**MP3**
	Self-aligning clevis at base	**MP5**
	Round flange at head	**MF3**
	Round flange at base	**MF4**
	Trunnion mounting	**MT4** [2)]
	Foot mounting	**MS2** [18)]
04	Piston Ø (ØAL) **40 ... 320** mm	
05	Piston rod Ø (ØMM) **25 ... 220** mm	
06	Stroke length in mm [3)]	
07	Design principle: Head and base flanged	**A**
08	Component series 30 ... 39 (30 ... 39: unchanged installation and connection dimensions)	**3X**

Line connection / version

09	According to ISO 1179-1 (pipe thread ISO 228-1)	**B**
	According to ISO 9974-1 (metric thread ISO 261)	**M** [33)]
	Flange hole pattern according to ISO 6162-1 tab. 2 type 1 (≙SAE 3000 PSI)	**F** [4; 21)]
	Flange hole pattern according to ISO 6162-2 tab. 2 type 1 (≙SAE 6000 PSI)	**D** [4; 9)]
	Flange hole pattern according to ISO 6164 tab. 1	**K** [1; 4)]
	Flange hole pattern according to ISO 6164 tab. 2	**H** [4)]
	According to ISO 1179-1 (pipe thread ISO 228-1) with flat pipe flange	**C** [31)]
	With mounted control block	**Y** [38)]
	For directional and control valves	
	Subplate NG6	**P** [4; 5)]
	Subplate NG10	**T** [4; 6)]
	Subplate NG16	**U** [4; 7)]
	Subplate NG25	**V** [4; 32)]
	For SL and SV valves	
	Subplate NG6	**A** [4; 5; 15)]
	Subplate NG10	**E** [4; 6; 15)]
	Subplate NG20	**L** [4; 7; 15)]
	Subplate NG30	**N** [4; 32; 15)]

Line connection / position at head

10	View to piston rod [30)]	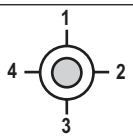	**1** **2** **3** **4**

Line connection/position at base

11	View to piston rod [30)]	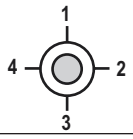	**1** **2** **3** **4**

Blocked for new application / Für Neuanwendung gesperrt

Ordering code series CDH2

01	02	03		04		05		06	07	08		09	10	11	12	13	14	15	16
CD	H2		/		/		/		A	3X	/								

Piston rod design

12	Hard chromium-plated	**C**
	Hardened and hard chromium-plated	**H** [23)]
	Nickel-plated and hard chromium-plated	**N** [19)]

Piston rod end

13	Thread for swivel head CGKD	**H**
	With mounted swivel head CGKD	**F**

End position cushioning

14	Without	**U**
	Both sides, self-adjusting	**D** [1)]
	Both sides, adjustable	**E**
	Base sides, self-adjusting	**K** [1; 38)]
	Head sides, self-adjusting	**S** [1; 38)]

Seal design - observe selection criteria for seals, see page “Selection criteria for seals” on page 71

15	**For mineral oil HL, HLP and HFA**	
	Standard seal system	**M**
	Standard seal system with guide rings	**L**
	Reduced friction, heavy industry	**R**
	For mineral oil HL, HLP, HFA and water glycol HFC	
	Standard seal system HFC	**G** [40)]
	Servo quality / reduced friction	**T**
	Chevron seal kits	**A**
	For HDFR phosphate ester and HFDU polyol ester	
	Servo quality / reduced friction	**S**
	Standard seal system FKM	**V** [40)]
	Chevron seal kits	**B**

Option

16	**Without** additional options, do **not** fill fields for additional options	**W**
	Additional options, fill fields for additional options	**Z**

Blocked for new application / Für Neuanwendung gesperrt

Ordering code series CDH2 (fields for additional options)

	01	02	03	04	05	06	07	08
Z								

01	Without inductive proximity switches	**W**
	Inductive proximity switches **without** mating connector - separate order, see page 49	**E** [37]
02	Without additional guide rings	**W**
	Additional guide rings	**F** [10], [28]
03	Without measuring coupling	**W**
	Measuring coupling, on both sides	**A**
	Measuring coupling, on both sides, stainless steel version	**E** [38]
04	Standard grease nipples, DIN 71412 form A	**W**
	Flat type grease nipples, DIN 3404 form A	**B**
05	Without piston rod extension	**W**
	Specify the piston rod extension LY in the plain text in mm	**Y**
06	Priming class CP3	**W**
	Painting class CP4	**B** [11]
	Painting class CP5	**L** [11]
	Painting class CP6	**U** [11]
	Painting class CP7	**E** [11]
07	Without oil filling	**W**
	With corrosion protection oil VG 68	**F**
08	Without test certificate	**W**
	With certificate of compliance 2.1 based on EN 10204	**B**
	With acceptance test certificate 3.1 based on EN 10204	**C**

Order examples:

Without additional options: CDH2MT4/63/45/350A3X/B11CHDMW, XV = 300 mm

With additional options: CDH2MF3/80/56/500A3X/B11CHDMZEWAWWWW

[1] Only piston Ø 40 ... 200 mm

[2] Trunnion position freely selectable. When ordering, always specify the "XV" dimensions in the plain text in mm

[3] Observe the max. available stroke length page 14 and admissible stroke length (acc. to buckling calculation) page 65 to 67

[4] Not possible with MF4

[5] Piston Ø 40 ... 80 mm, only position 11, subplates only possible in combination with line connection "B" at the head

[6] Piston Ø 63 ... 200 mm, only position 11, subplates only possible in combination with line connection "B" at the head

[7] Piston Ø 125 ... 200 mm, only position 11, subplates only possible in combination with line connection "B" at the head

[9] Only piston Ø 80 ... 320 mm

[10] Seal designs A, B not possible; Piston Ø 220 ... 320 mm standard

[11] Specify RAL color in the plain text

[15] Subplates for SL and SV valves (check valves) Please note: Seal designs T, G, L, R, S and V are not designed for static hold function!

[18] Not standardized

[19] From piston Ø 63 mm

[21] Only piston Ø 63 ... 200 mm

[23] Only piston rod Ø 25 ... 140 mm

[28] Standard with seal design "L"

[30] All graphical pictures in the data sheet show position 1

[31] With MS2, only position 11 is possible

[32] Piston Ø 180 ... 200 mm, only position 11, subplates only possible in combination with line connection "B" at the head

[33] Version does not comply with ISO 6022

[35] Not possible with MP3

[37] Min. stroke length = 20 mm

[38] On request

[40] Not with piston rod Ø 220 mm

Blocked for new application / Für Neuanwendung gesperrt

Ordering code series CGH2

01	02	03		04		05		06	07	08		09	10	11	12	13	14	15	16
CG	H2		/		/		/		A	3X	/								

01	Double-rod cylinder	**CG** [18]
02	Series	**H2**

Types of mounting

03	Round flange at head	**MF3**
	Trunnion mounting	**MT4** [2]
	Foot mounting	**MS2**
04	Piston Ø (ØAL) **40 ... 320** mm	
05	Piston rod Ø (ØMM) **25 ... 220** mm	
06	Stroke length in mm [3]	
07	Design principle: Head and base flanged	**A**
08	Component series 30 ... 39 (30 ... 39: unchanged installation and connection dimensions)	**3X**

Line connection / version

09	According to ISO 1179-1 (pipe thread ISO 228-1)	**B**
	According to ISO 9974-1 (metric thread ISO 261)	**M** [33]
	Flange hole pattern according to ISO 6162-1 tab. 2 type 1 (≙SAE 3000 PSI)	**F** [21]
	Flange hole pattern according to ISO 6162-2 tab. 2 type 1 (≙SAE 6000 PSI)	**D** [9]
	Flange hole pattern according to ISO 6164 tab. 1	**K** [1]
	Flange hole pattern according to ISO 6164 tab. 2	**H**
	According to ISO 1179-1 (pipe thread ISO 228-1) with flat pipe flange	**C** [31]
	With mounted control block	**Y** [38]

Line connection / position at head

10	View to piston rod [30] 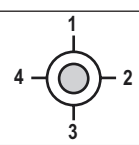	**1**
		2
		3
		4

Line connection / position at base

11	View to piston rod [30] 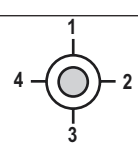	**1**
		2
		3
		4

☞ **Notice:** Preferred types and standard units are contained in the EPS (standard price list).

Blocked for new application / Für Neuanwendung gesperrt

Ordering code series CGH2

01	02	03		04		05		06	07	08		09	10	11	12	13	14	15	16
CG	H2		/		/		/		A	3X	/								

Piston rod design

12	Hard chromium-plated	**C**
	Hardened and hard chromium-plated	**H** [23)]

Piston rod end

13	Thread for swivel head CGKD	**H**
	With mounted swivel head CGKD	**F** [17)]

End position cushioning

14	Without	**U**
	Both sides, self-adjusting	**D** [1)]
	Both sides, adjustable	**E**

Seal design - observe selection criteria for seals, see page 71

15	**For mineral oil HL, HLP and HFA**	
	Standard seal system	**M**
	Standard seal system with guide rings	**L**
	Reduced friction, heavy industry	**R**
	For mineral oil HL, HLP, HFA and water glycol HFC	
	Standard seal system HFC	**G** [40)]
	Servo quality / reduced friction	**T**
	Chevron seal kits	**A**
	For HDFR phosphate ester and HFDU polyol ester	
	Servo quality / reduced friction	**S**
	Standard seal system FKM	**V** [40)]
	Chevron seal kits	**B**

Option

16	**Without** additional options, do **not** fill fields for additional options	**W**
	Additional options, fill fields for additional options	**Z**

Blocked for new application / Für Neuanwendung gesperrt

Ordering code series CGH2 (fields for additional options)

Z

01	02	03	04	05	06	07	08

01	Without inductive proximity switches	**W**
	Inductive proximity switches **without** mating connector - separate order, see page 49	**E** 37)
02	Without additional guide rings	**W**
	Additional guide rings	**F** 10), 28)
03	Without measuring coupling	**W**
	Measuring coupling, on both sides	**A**
	Measuring coupling, on both sides, stainless steel version	**E** 38)
04	Standard grease nipples, DIN 71412 form A	**W**
	Flat type grease nipples, DIN 3404 form A	**B**
05	Without piston rod extension	**W**
	Specify the piston rod extension LY in the plain text in mm	**Y** 16)
06	Priming class CP3	**W**
	Painting class CP4	**B** 11)
	Painting class CP5	**L** 11)
	Painting class CP6	**U** 11)
	Painting class CP7	**E** 11)
07	Without oil filling	**W**
	With corrosion protection oil VG 68	**F**
08	Without test certificate	**W**
	With certificate of compliance 2.1 based on EN 10204	**B**
	With acceptance test certificate 3.1 based on EN 10204	**C**

Order examples:

Without additional options: CGH2MF3/100/70/500A3X/B11CHUMW

With additional options: CGH2MF3/100/70/500A3X/B11CHUMZEWAWWWWW

1) Only piston Ø 40 ... 200 mm
2) Trunnion position freely selectable. When ordering, always specify the "XV" dimensions in the plain text in mm
3) Observe the max. available stroke length page 14 and admissible stroke length (acc. to buckling calculation) page 65 to 67
9) Only piston Ø 80 ... 320 mm
10) Seal designs A, B not possible; Piston Ø 220 ... 320 mm standard
11) Specify RAL color in the plain text
16) Only at left piston rod side (orientation: catalog figures)
17) Only one swivel head / plain clevis mounted, left piston rod side (orientation: catalog figures)
18) Not standardized
21) Only piston Ø 63 ... 200 mm
23) Only piston rod Ø 25 ... 140 mm
28) Standard with seal design "L"
30) All graphical pictures in the data sheet show position 1
31) With MS2, only position 11 is possible
33) Version does not comply with ISO 6022
37) Min. stroke length = 20 mm
38) On request
40) Not with piston rod Ø 220 mm

Blocked for new application / Für Neuanwendung gesperrt

Ordering code series CSH2

01	02	03		04		05		06	07	08		09	10	11	12	13	14	15	16
CS	H2		/		/		/		A	3X	/								

01	Differential cylinder with position measurement system	**CS** [18]
02	Series	**H2**

Types of mounting

03	Swivel eye at base	**MP3**
	Self-aligning clevis at base	**MP5**
	Round flange at head	**MF3**
	Round flange at base	**MF4**
	Trunnion mounting	**MT4** [2]
	Foot mounting	**MS2**
04	Piston Ø (ØAL) **40 ... 320** mm	
05	Piston rod Ø (ØMM) **28 ... 220** mm	
06	Stroke length in mm [3]	
07	Design principle: Head and base flanged	**A**
08	Component series 30 ... 39 (30 ... 39: unchanged installation and connection dimensions)	**3X**

Line connection / version

09	According to ISO 1179-1 (pipe thread ISO 228-1)	**B**
	According to ISO 9974-1 (metric thread ISO 261)	**M** [33]
	Flange hole pattern according to ISO 6162-1 tab. 2 type 1 (≙SAE 3000 PSI)	**F** [4; 21]
	Flange hole pattern according to ISO 6162-2 tab. 2 type 1 (≙SAE 6000 PSI)	**D** [4; 9]
	Flange hole pattern according to ISO 6164 tab. 1	**K** [1; 4]
	Flange hole pattern according to ISO 6164 tab. 2	**H** [4]
	According to ISO 1179-1 (pipe thread ISO 228-1) with flat pipe flange	**C** [31]
	With mounted control block	**Y** [38]
	– For directional and control valves	
	Subplate NG6	**P** [4; 5]
	Subplate NG10	**T** [4; 6]
	Subplate NG16	**U** [4; 7]
	Subplate NG25	**V** [4; 32]
	– For SL and SV valves	
	Subplate NG6	**A** [4; 5; 15]
	Subplate NG10	**E** [4; 6; 15]
	Subplate NG20	**L** [4; 7; 15]
	Subplate NG30	**N** [4; 15; 32]

Line connection / position at head

10	View to piston rod [30]	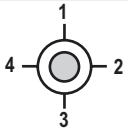	**1** **2** **3** **4**

Line connection/position at base

11	View to piston rod [30]	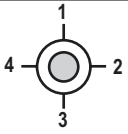	**1** **2** **3** **4**

Blocked for new application / Für Neuanwendung gesperrt

Ordering code series CSH2

01	02	03		04		05		06	07	08		09	10	11	12	13	14	15	16
CS	H2		/		/		/		A	3X	/								Z

Piston rod design

12	Hard chromium-plated	**C**
	Hardened and hard chromium-plated	**H** [19]

Piston rod end

13	Thread for swivel head CGKD	**H**
	With mounted swivel head CGKD	**F**

End position cushioning

14	Without	**U**
	Both sides, adjustable	**E** [20]

Seal design - observe selection criteria for seals, see page 71

15	**For mineral oil HL, HLP and HFA**	
	Standard seal system	**M** [29]
	Standard seal system with guide rings	**L**
	Reduced friction, heavy industry	**R** [29]
	For mineral oil HL, HLP, HFA and water glycol HFC	
	Standard seal system HFC	**G** [29; 41]
	Servo quality / reduced friction	**T** [29]
	For HDFR phosphate ester and HFDU polyol ester	
	Servo quality / reduced friction	**S** [29]
	Standard seal system FKM	**V** [29; 41]

Option

16	**Additional** options, fill fields for additional options	**Z**

Blocked for new application / Für Neuanwendung gesperrt

Ordering code series CSH2 (fields for additional options)

Z

01	02	03	04	05	06	07	08
T							

01	Position measurement system (magnetostrictive) **without** mating connector - separate order, see page 53, 55, 56 and 58	**T**

02	Analog output 4 ... 20 mA	**C**
	Analog output 0 ... 10 V	**F**
	Digital output SSI (resolution 5 µm, asynchronious forward)	**D**
	Digital output SSI (resolution 1 µm, synchronious forward)	**S**
	Profibus D63 (integrated supply)	**N**
	Profibus D53 (separate supply line)	**P**
	IO-Link	**L** 39); 40)
	Profinet RT and IRT with encoder profile	**R**

03	Without measuring coupling	**W**
	Measuring coupling, on both sides	**A**
	Measuring coupling, on both sides, stainless steel version	**E** 38)

04	Standard grease nipples, DIN 71412 form A	**W**
	Spherical bearing, maintenance-free	**A** 14); 35)
	Flat type grease nipples, DIN 3404 form A	**B**

05	Without piston rod extension	**W**
	Specify the piston rod extension LY in the plain text in mm	**Y**

06	Priming class CP3	**W**
	Painting class CP4	**B** 11)
	Painting class CP5	**L** 11)
	Painting class CP6	**U** 11)
	Painting class CP7	**E** 11)

07	Without oil filling	**W**
	With corrosion protection oil VG 68	**F**

08	Without test certificate	**W**
	With certificate of compliance 2.1 based on EN 10204	**B**
	With acceptance test certificate 3.1 based on EN 10204	**C**

Order examples:

With additional options: CSH2MP5/100/56/300A3X/T11CAEMZTCAWWWWW

1) Only piston Ø 40 ... 200 mm
2) Trunnion position freely selectable. When ordering, always specify the "XV" dimensions in the plain text in mm
3) Observe the max. available stroke length page 14 and admissible stroke length (acc. to buckling calculation) page 65 to 67
4) Not possible with MF4
5) Piston Ø 40 ... 80 mm, only position 11, subplates only possible in combination with line connection "B" at the head
6) Piston Ø 63 ... 200 mm, only position 11, subplates only possible in combination with line connection "B" at the head
7) Piston Ø 125 ... 200 mm, only position 11, subplates only possible in combination with line connection "B" at the head
9) Only piston Ø 80 ... 320 mm
11) Specify RAL color in the plain text
14) Not possible with plain clevis "N"
15) Subplates for SL and SV valves (check valves)
Please note: Seal designs T, G, L, R, S and V are not designed for static hold function!
18) Not standardized
19) Only piston rod Ø 28 ... 140 mm
20) Possible from piston rod Ø 45 mm
21) Only piston Ø 63 ... 200 mm
29) With CSH, by default with guide rings
30) All graphical pictures in the data sheet show position 1
31) With MS2, only position 11 is possible
32) Piston Ø 180 ... 200 mm, only position 11, subplates only possible in combination with line connection "B" at the head
33) Version does not comply with ISO 6022
35) Not possible with MP3
38) On request
39) Not possible with MP3 and MP5
40) Observe min. stroke length 50 mm / max. stroke length 2540 mm
41) Not with piston rod Ø 220 mm

Blocked for new application / Für Neuanwendung gesperrt

Technical data
(For applications outside these values, please consult us!)

Standards:
The installation dimensions and types of mounting of the cylinder comply with the standards DIN 24333 and ISO 6022.

Nominal pressure: 250 bar
Static test pressure: 375 bar
Reduced test pressure 315 bar
The maximum operating pressures must be less than or equal to the applicable nominal pressures and apply to applications with shock-free operation with reference to excess pressure and/or external loads. With extreme loads like e.g. high cycle sequence, mounting elements and threaded piston rod connections must be designed for durability.

Minimum pressure:
Depending on the application, operating conditions and technical design, a certain minimum pressure (approx. 10 bar) is required in order to guarantee a technically perfect function of the hydraulic cylinder.

Installation position: arbitrary

Hydraulic fluid (additional data sheet):
Mineral oils DIN 51524 HL, HLP (90220)
Oil-in-water emulsion HFA (90223)
Water glycol HFC (90223)
Phosphate ester HFDR (90222)
Polyol ester HFDU (90222)

Hydraulic fluid temperature range: see page 71
Ambient temperature range: see page 71
Optimum viscosity range: 20 to 100 mm^2/s
Minimum admissible viscosity: 12 mm^2/s
Maximum admissible viscosity: 380 mm^2/s

Cleanliness class acc. to ISO
Maximum admissible degree of contamination of the hydraulic fluid according to ISO 4406 (c) class 20/18/15. The cleanliness classes specified for the components must be adhered to in hydraulic systems. Effective filtration prevents faults and simultaneously increases the life cycle of the components.
For the selection of the filters,
see www.boschrexroth.com/filter

Bleeding by default secured against unscrewing

Color set-up:
Priming: By default, hydraulic cylinders are primed with a coating (color gentian blue RAL 5010) of min. 40 µm, see page 83.
Other colors on request.
Following surfaces of cylinders and attached parts are not primed:
- All fitting diameters to the customer side
- Sealing surfaces for line connection
- Sealing surfaces for flange connection
- Connection surface for valve mounting
- Inductive proximity switches
- Position measurement system
- Measuring coupling
- Spherical / plain bearing
- Grease nipples

Painting: By default, hydraulic cylinders can be ordered in four corrosivity categories in the RAL colors, see page 83.
Following surfaces of cylinders and attached parts are not painted:
- All fitting diameters and connection surfaces to customer side
- Sealing surfaces for line connection
- Sealing surfaces for flange connection
- Connection surface for valve mounting
- Inductive proximity switches
- Position measurement system
- Measuring coupling
- Spherical / plain bearing
- Grease nipples

Surfaces not primed or painted are protected with solvent-free corrosion protection compound.
Accessories ordered as a separate order item are not primed or painted by default. Corresponding priming and/or painting on request.

Blocked for new application / Für Neuanwendung gesperrt

Technical data

(For applications outside these values, please consult us!)

Stroke velocity:

Please observe the guideline on max. stroke velocities (with recommended flow velocity of 5 m/s in the line connection) in the table. Higher stroke velocity on request.

If the extension velocity is considerably higher than the retraction velocity of the piston rod, drag-out losses of the medium may result. If necessary, please consult us.

Piston Ø (mm)	Line connection	Max. stroke velocity in m/s
40	G1/2	0.31
50	G1/2	0.20
63	G3/4	0.28
80	G3/4	0.18
100	G1	0.20
125	G1	0.13
140	G1 1/4	0.16
160	G1 1/4	0.12
180	G1 1/4	0.10
200	G1 1/4	0.08
220	G1 1/2	0.09
250	G1 1/2	0.07
280	G1 1/2	0.06
320	G1 1/2	0.04

Boundary and application conditions:

- The mechanical alignment of the movement axis and thus the mounting points of hydraulic cylinder and piston rod must be ensured. Lateral forces on the guides of piston rod and piston are to be avoided. It may be necessary to consider the own weight of the hydraulic cylinder (MP3 / MP5 or MT4) or the piston rod.
- The bending length/bending load of the piston rod and/or the hydraulic cylinder must be observed (see page topic Bucklig).
- The maximum admissible stroke velocities with regard to the suitability/load of seals must be observed as must their compatibility with the properties of the hydraulic fluid (see page topic Seals).
- The maximum admissible velocities/kinetic energies when moving into the end positions, also considering external loads, must be observed.
  Danger: Excess pressure
- The maximum admissible operating pressure must be complied with in any operating state of the hydraulic cylinder. Possible pressure intensification resulting from the area ratio of annulus area to piston area and possible throttling points are to be observed.
- Detrimental environmental influences, like e.g. aggressive finest particles, vapors, high temperatures, etc. as well as contaminations and deterioration of the hydraulic fluid are to be avoided.

Notice:

- This list does not claim to be complete. In case of questions regarding the compatibility with the medium or exceedance of the boundary or application conditions, please contact us.
- All graphical pictures in the data sheet are examples. The product supplied may therefore differ from the figure shown.

Blocked for new application / Für Neuanwendung gesperrt

Technical data
(For applications outside these values, please consult us!)

Acceptance:
Every hydraulic cylinders is tested according to Bosch Rexroth standards and following ISO 10100:2020 with module L.

Safety instructions:
For assembly, commissioning and maintenance of hydraulic cylinders, observe the operating instructions 07100-B! Service and repair work has to be performed by Bosch Rexroth AG or by personnel especially trained for this purpose. No warranty is accepted for damage as a consequence of assembly, maintenance or repair work not performed by Bosch Rexroth AG.

Check lists for hydraulic cylinders:
Cylinders the characteristics and/or application parameters of which deviate from the values specified in the data sheet can only be offered as a special version on request. For offers, the deviations of the characteristics and / or application parameters must be described in the check lists for hydraulic cylinders (07200).

Minimum strokes:
When using end position cushioning, the minimum stroke must also be observed, see page 68 "End position cushioning".

Project planning software ICS (Interactive Catalog System)

The ICS (Interactive Catalog System) is a selection and project planning aid for hydraulic cylinders. The ICS allows designers for machines and systems to quickly and reliably find the perfect hydraulic cylinder solution through logic-guided type key enquiries. This software helps to solve design and project planning tasks more quickly and efficiently. After having been guided through the product selection, the user quickly and reliably gets the exact technical data of the selected component as well as 3D CAD data in the correct file format for all common CAD systems. This allows users to reduce costs while increasing their competitiveness.

www.boschrexroth.com/mill-type-cylinder

Blocked for new application / Für Neuanwendung gesperrt

Technical data

(For applications outside these values, please consult us!)

Diameters, areas, forces, flow

Piston	Piston rod	Area ratio	Areas			Force at 250 bar [1]			Flow at 0.1 m/s [2]			Max. available stroke length
			Piston	Rod	Ring	Pressure	Diff.	Pulling	Off	Diff.	On	
ØAL mm	ØMM mm	ϕ A_1/A_3	A_1 cm²	A_2 cm²	A_3 cm²	F_1 kN	F_2 kN	F_3 kN	q_{V1} l/min	q_{V2} l/min	q_{V3} l/min	mm
40	**25**	1.64	12.56	4.90	7.65	31.40	12.25	19.12	7.5	2.9	4.6	2000
	28	1.96		6.16	6.40		15.40	16.00		3.7	3.8	
50	**32**	1.69	19.63	8.04	11.59	49.10	20.12	28.98	11.8	4.8	7.0	2000
	36	2.08		10.18	9.45		25.45	23.65		6.1	5.7	
63	**40**	1.67	31.17	12.56	18.61	77.90	31.38	46.52	18.7	7.5	11.2	2000
	45	2.04		15.90	15.27		39.75	38.15		9.5	9.2	
80	**50**	1.66	50.26	19.63	30.63	125.65	49.07	76.58	30.2	11.8	18.4	2000
	56	1.96		24.63	25.63		61.55	64.10		14.8	15.4	
100	**63**	1.66	78.54	31.16	47.38	196.35	77.93	118.42	47.1	18.7	28.4	3000
	70	1.96		38.48	40.06		96.20	100.15		23.1	24.0	
125	**80**	1.69	122.72	50.24	72.48	306.75	125.62	181.13	73.6	30.1	43.5	3000
	90	2.08		63.62	59.10		159.05	147.70		38.2	35.4	
140	**90**	1.70	153.94	63.62	90.32	384.75	159.05	225.70	92.4	38.2	54.2	3000
	100	2.04		78.54	75.40		196.35	188.40		47.1	45.3	
160	**100**	1.64	201.06	78.54	122.50	502.50	196.35	306.15	120.6	47.1	73.5	3000
	110	1.90		95.06	106.00		237.65	264.85		57.0	63.6	
180	**110**	1.60	254.47	95.06	159.43	636.17	237.65	398.52	152.7	57.0	95.7	3000
	125	1.93		122.72	131.75		306.80	329.37		73.6	79.1	
200	**125**	1.64	314.16	122.72	191.44	785.25	306.80	478.45	188.5	73.6	114.9	3000
	140	1.96		153.96	160.20		384.90	400.35		92.4	96.1	
220	**140**	1.68	380.1	153.96	226.2	950.3	384.9	565.5	228.1	92.4	135.7	6000
	160	2.12		201.0	179.1		502.6	447.7		120.7	107.4	
250	**160**	1.69	490.8	201.0	289.8	1227.2	502.6	724.5	294.5	120.7	173.8	6000
	180	2.08		254.4	236.4		636.2	590.0		152.7	141.8	
280	**180**	1.70	615.7	254.4	361.3	1539.4	636.2	903.2	369.4	152.7	216.7	6000
	200	2.04		314.1	301.6		785.4	753.9		188.5	180.9	
320	**200**	1.64	804.2	314.1	490.1	2010.6	785.4	1225.2	482.5	188.5	294.0	6000
	220	1.90		380.1	424.2		950.3	1060.3		228.1	254.4	

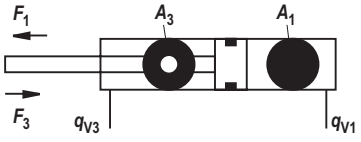

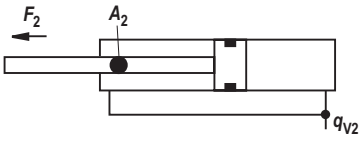

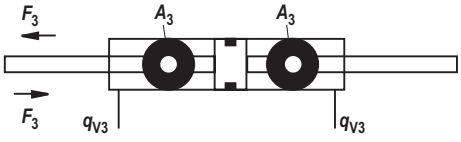

[1] Theoretical static cylinder force (without consideration of the efficiency and admissible load for attachment parts such as swivel heads, plates, or valves, etc.)

[2] Stroke velocity

Blocked for new application / Für Neuanwendung gesperrt

Technical data

(For applications outside these values, please consult us!)

Tolerances according to DIN ISO 6022

Installation dimensions	WC	XC [2]	XO [2]	XS [1; 2]	XV [2]	ZP [2]	Stroke tolerances [3]
Type of mounting	MF3	MP3	MP5	MS2	MT4	MF4	
Stroke length	Tolerances						
≤ 1250	±2	±1.5	±1.5	±2	±2	±1.5	+2
> 1250 – ≤ 3150	±4	±3	±3	±4	±4	±3	+5
> 3150 – ≤ 6000	±8	±5	±5	±8	±8	±5	+8

1) Not standardized
2) Including stroke length
3) Stroke tolerances must not be added to the tolerances listed in this table.

Blocked for new application / Für Neuanwendung gesperrt

Overview types of mounting: Series CDH2 / CGH2

CDH2 MP3; see page 18, 19



CDH2 MP5; see page 20, 21



CDH2 MF3; see page 22, 23



CGH2 MF3; see page 22, 23

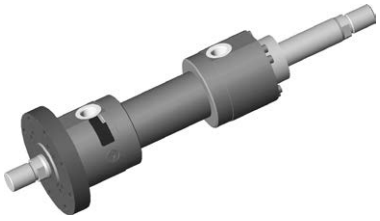

CDH2 MF4; see page 24, 25



CDH2 MT4; see page 26, 27

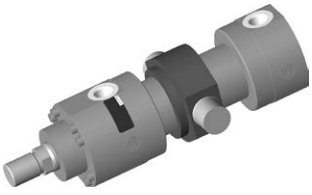

CGH2 MT4; see page 26, 27



CDH2 MS2; see page 28, 29



CGH2 MS2; see page 28, 29



Blocked for new application / Für Neuanwendung gesperrt

Overview types of mounting: Series CSH2

CSH2 MP3
see page 30, 31



CSH2 MP5
see page 32, 33



CSH2 MF3
see page 34, 35

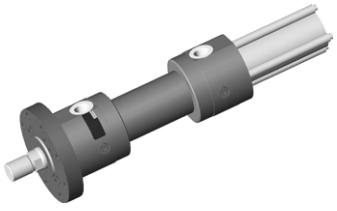

CSH2 MF4
see page 36, 37

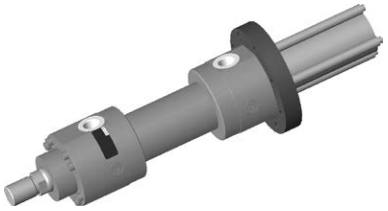

CSH2 MT4
see page 38, 39



CSH2 MS2
see page 40, 41



Blocked for new application / Für Neuanwendung gesperrt

Dimensions

Swivel eye at base CDH2: MP3 (dimensions in mm)

CDH2 MP3; ØAL 40 - 200 mm

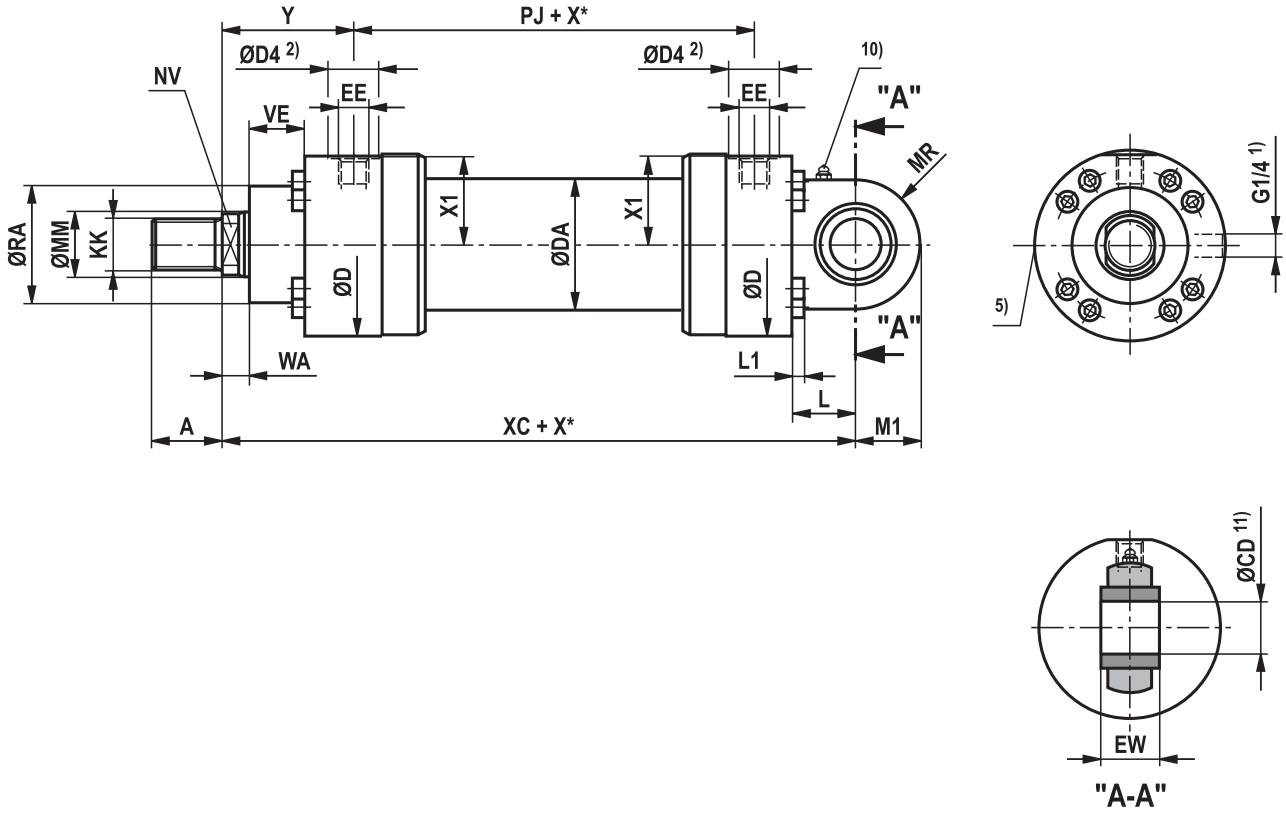

CDH2 MP3: with seal design "A", "B" and ØAL 160 - 320 mm

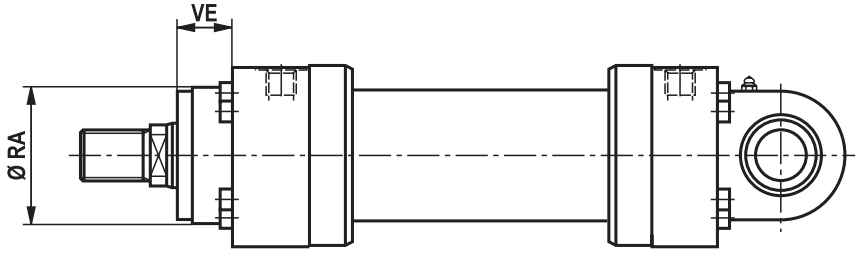

Blocked for new application / Für Neuanwendung gesperrt

Dimensions

Swivel eye at base CDH2: MP3 (dimensions in mm)

ØAL	ØMM	KK	A	NV	ØD	ØDA	ØD4 [2]	EE [4; 16]	EE [4; 17]	Y	PJ	X1
40 [6]	**25/28**	M20x1,5	28	19/22	88	52	34	G1/2	M22x1,5	83	120	41
50	**32/36**	M27x2	36	27/30	102	62	34	G1/2	M22x1,5	98	120	48.5
63	**40/45**	M33x2	45	32/36	120	78	42	G3/4	M27x2	112	133	56.5
80	**50/56**	M42x2	56	41/46	145	95	42	G3/4	M27x2	120	155	69.5
100	**63/70**	M48x2	63	50/60	170	125	47	G1	M33x2	134	171	82
125	**80/90**	M64x3	85	65/75	206	150	47	G1	M33x2	153	205	100.5
140	**90/100**	M72x3	90	75/85	226	170	58	G1 1/4	M42x2	166	219	109.5
160	**100/110**	M80x3	95	85/95	265	190	58	G1 1/4	M42x2	185	235	129.5
180	**110/125**	M90x3	105	95/110	292	210	58	G1 1/4	M42x2	194	264	143.5
200	**125/140**	M100x3	112	110/120	306	235	58	G1 1/4	M42x2	220	278	150.5
220 [6]	**140/160**	M125x4	125	120/140	355	270	65	G1 1/2	M48x2 [3]	244	326	174
250	**160/180**	M125x4	125	140/160	395	305	65	G1 1/2	M48x2 [3]	257	326	194
280 [6]	**180/200**	M160x4	160	160/180	445	343	65	G1 1/2	M48x2 [3]	290	375	220.5
320	**200/220**	M160x4	160	180/200	490	394	65	G1 1/2	M48x2 [3]	282	391	243

ØAL	ØMM	WA	XC	L	L1	MR	M1	ØCD H9	EW h12	ØRA [7]	VE [7]	ØRA [8]	VE [8]
40 [6]	**25/28**	18	282	53	8	32	32	25	25	52	29	88	–
50	**32/36**	18	305	61	8	40	40	32	32	63	29	102	–
63	**40/45**	21	348	74	8	50	50	40	40	75	32	120	–
80	**50/56**	24	395	90	10	63	63	50	50	90	36	145	–
100	**63/70**	27	442	102	12	71	71	63	63	110	41	170	–
125	**80/90**	31	520	124	16	90	90	80	80	132	45	206	–
140	**90/100**	31	580	149	16	100	100	90	90	145	45	226	–
160	**100/110**	35	617	150	16	112	112	100	100	160	50	200	50
180	**110/125**	40	690	180	20	129	129	110	110	185	55	220	55
200	**125/140**	40	756	206	20	145	145	125	125	200	61	235	61
220 [6]	**140/160**	42	890	253	20	179 [12]	187 [12]	160	160	235	71	270	71
250	**160/180**	42	903	253	24	179 [12]	187 [12]	160	160	250	71	300	71
280 [6]	**180/200**	48	1072	320	30	230 [12]	240 [12]	200	200	295	88	325	88
320	**200/220**	48	1080	320	30	231 [12]	241 [12]	200	200	320	88	365	88

ØAL = piston Ø
ØMM = piston rod Ø
X* = stroke length

1) Bleeding: With view to the piston rod, the position is offset by 90° in relation to the line connection (clockwise)
2) Ø D4 max. 0.5 mm deep
3) Thread size does not comply with ISO 6022; M50 x 2 available on request
4) Flange connections see separate table pages 36 and 37
5) Throttle valve only with end position cushioning "E" (180° for bleeding)
6) Piston Ø not standardized
7) Dimensions for cylinders with seal design M, T, G, L, R, S and V
8) Dimensions for cylinders with seal design A and B
10) Standard version "W" Grease nipple, cone head form A according to DIN 71412
11) Related bolt Ø f8
12) The specified dimensions are maximum values, tolerance classes 342 according to ISO 9013 Thermal cutting
16) Line connection "B" and "C"
17) Line connection "M"

Blocked for new application / Für Neuanwendung gesperrt

Dimensions

Self-aligning clevis at base CDH2: MP5 (dimensions in mm)

CDH2 MP5

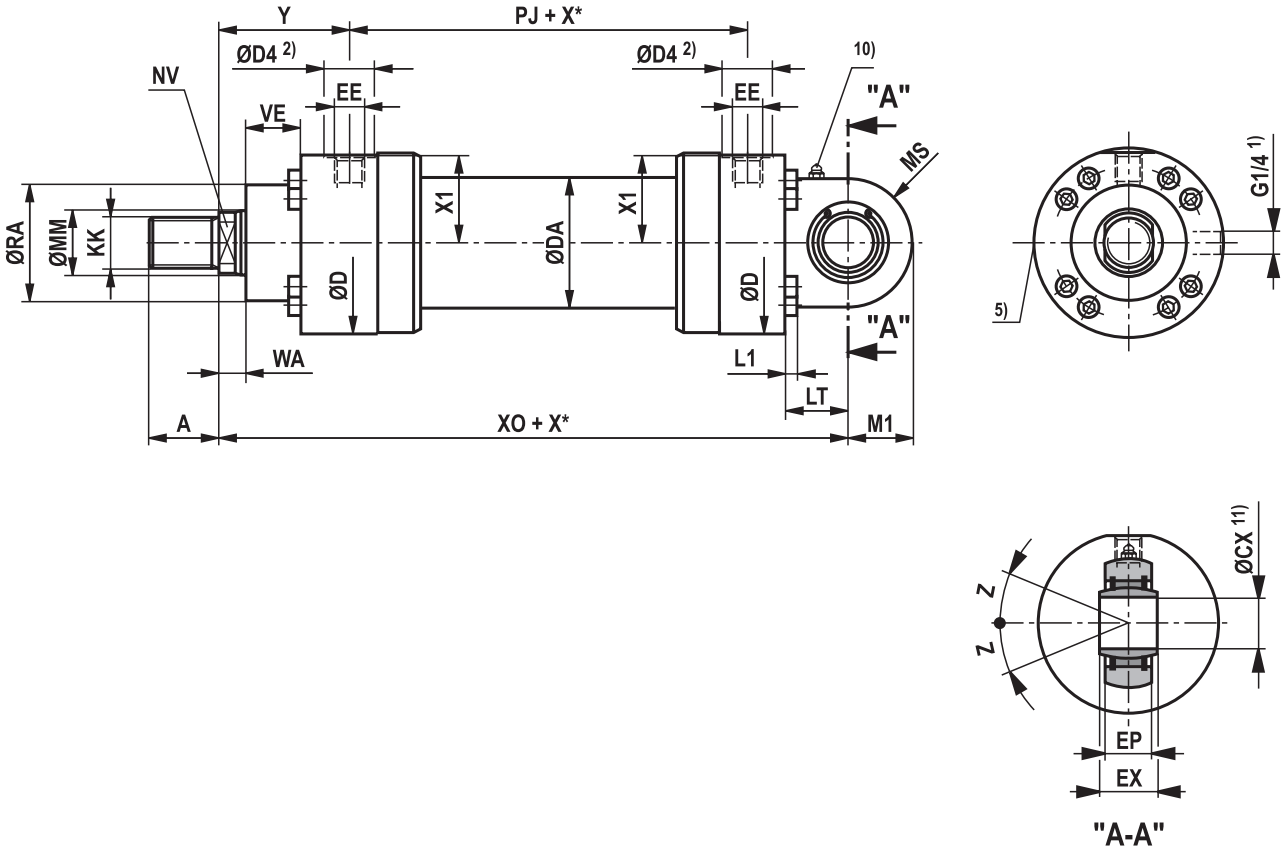

CDH2 MP5: with seal design "A", "B" and ØAL 160 - 320 mm

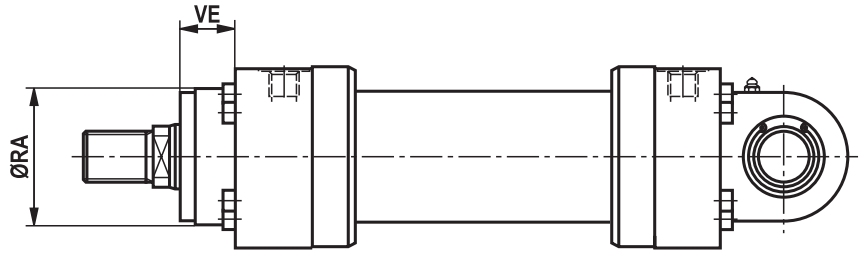

Blocked for new application / Für Neuanwendung gesperrt

Dimensions

Self-aligning clevis at base CDH2: MP5 (dimensions in mm)

ØAL	ØMM	KK	A	NV	ØD	ØDA	ØD4 [2]	EE [4; 16]	EE [4; 17]	Y	PJ	X1	WA	XO
40 [6]	**25/28**	M20x1,5	28	19/22	88	52	34	G1/2	M22x1,5	83	120	41	18	282
50	**32/36**	M27x2	36	27/30	102	62	34	G1/2	M22x1,5	98	120	48.5	18	305
63	**40/45**	M33x2	45	32/36	120	78	42	G3/4	M27x2	112	133	56.5	21	348
80	**50/56**	M42x2	56	41/46	145	95	42	G3/4	M27x2	120	155	69.5	24	395
100	**63/70**	M48x2	63	50/60	170	125	47	G1	M33x2	134	171	82	27	442
125	**80/90**	M64x3	85	65/75	206	150	47	G1	M33x2	153	205	100.5	31	520
140	**90/100**	M72x3	90	75/85	226	170	58	G1 1/4	M42x2	166	219	109.5	31	580
160	**100/110**	M80x3	95	85/95	265	190	58	G1 1/4	M42x2	185	235	129.5	35	617
180	**110/125**	M90x3	105	95/110	292	210	58	G1 1/4	M42x2	194	264	143.5	40	690
200	**125/140**	M100x3	112	110/120	306	235	58	G1 1/4	M42x2	220	278	150.5	40	756
220 [6]	**140/160**	M125x4	125	120/140	355	270	65	G1 1/2	M48x2 [3]	244	326	174	42	890
250	**160/180**	M125x4	125	140/160	395	305	65	G1 1/2	M48x2 [3]	257	326	194	42	903
280 [6]	**180/200**	M160x4	160	160/180	445	343	65	G1 1/2	M48x2 [3]	290	375	220.5	48	1072
320	**200/220**	M160x4	160	180/200	490	394	65	G1 1/2	M48x2 [3]	282	391	243	48	1080

ØAL	ØMM	LT	L1	MS	M1	ØCX [11] H7	EP	EX h12	ØRA [7]	VE [7]	ØRA [8]	VE [8]	Z
40 [6]	**25/28**	53	8	32	32	25	22	25	52	29	88	–	2 °
50	**32/36**	61	8	40	40	32	27	32	63	29	102	–	4 °
63	**40/45**	74	8	50	50	40	32	40	75	32	120	–	4 °
80	**50/56**	90	10	63	63	50	40	50	90	36	145	–	4 °
100	**63/70**	102	12	71	71	63	52	63	110	41	170	–	4 °
125	**80/90**	124	16	90	90	80	66	80	132	45	206	–	4 °
140	**90/100**	149	16	100	100	90	72	90	145	45	226	–	4 °
160	**100/110**	150	16	112	112	100	84	100	160	50	200	50	4 °
180	**110/125**	180	20	129	129	110	88	110	185	55	220	55	4 °
200	**125/140**	206	20	145	145	125	102	125	200	61	235	61	4 °
220 [6]	**140/160**	253	20	179 [12]	187 [12]	160	130	160	235	71	270	71	4 °
250	**160/180**	253	24	179 [12]	187 [12]	160	130	160	250	71	300	71	4 °
280 [6]	**180/200**	320	30	230 [12]	240 [12]	200	138	200	295	88	325	88	4 °
320	**200/220**	320	30	231 [12]	241 [12]	200	162	200	320	88	365	88	4 °

ØAL = piston Ø
ØMM = piston rod Ø
X* = stroke length

1) Bleeding: With view to the piston rod, the position is offset by 90° in relation to the line connection (clockwise)
2) Ø D4 max. 0.5 mm deep
3) Thread size does not comply with ISO 6022; M50 x 2 available on request
4) Flange connections see separate table pages 36 and 37
5) Throttle valve only with end position cushioning "E" (180° for bleeding)
6) Piston Ø not standardized
7) Dimensions for cylinders with seal design M, T, G, L, R, S and V
8) Dimensions for cylinders with seal design A and B
10) Standard version "W" Grease nipple, cone head form A according to DIN 71412
11) Related bolt Ø f8
12) The specified dimensions are maximum values, tolerance classes 342 according to ISO 9013 Thermal cutting
16) Line connection "B" and "C"
17) Line connection "M"

Blocked for new application / Für Neuanwendung gesperrt

Dimensions

Round flange at head CDH2/CGH2: MF3 (dimensions in mm)

CDH2 MF3

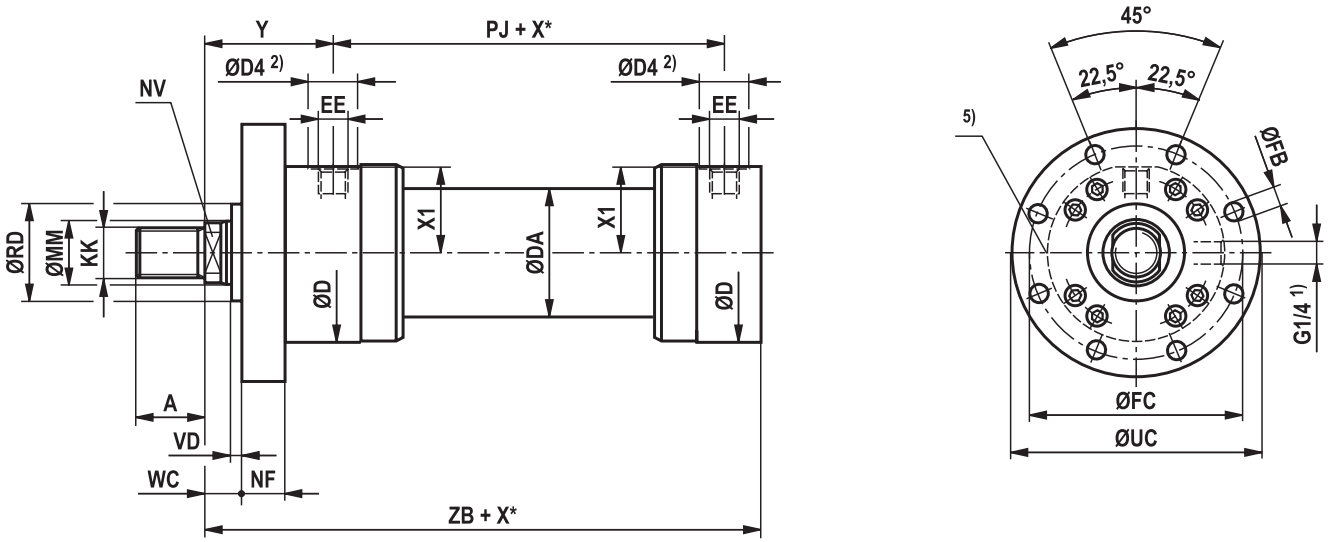

CGH2 MF3 10)

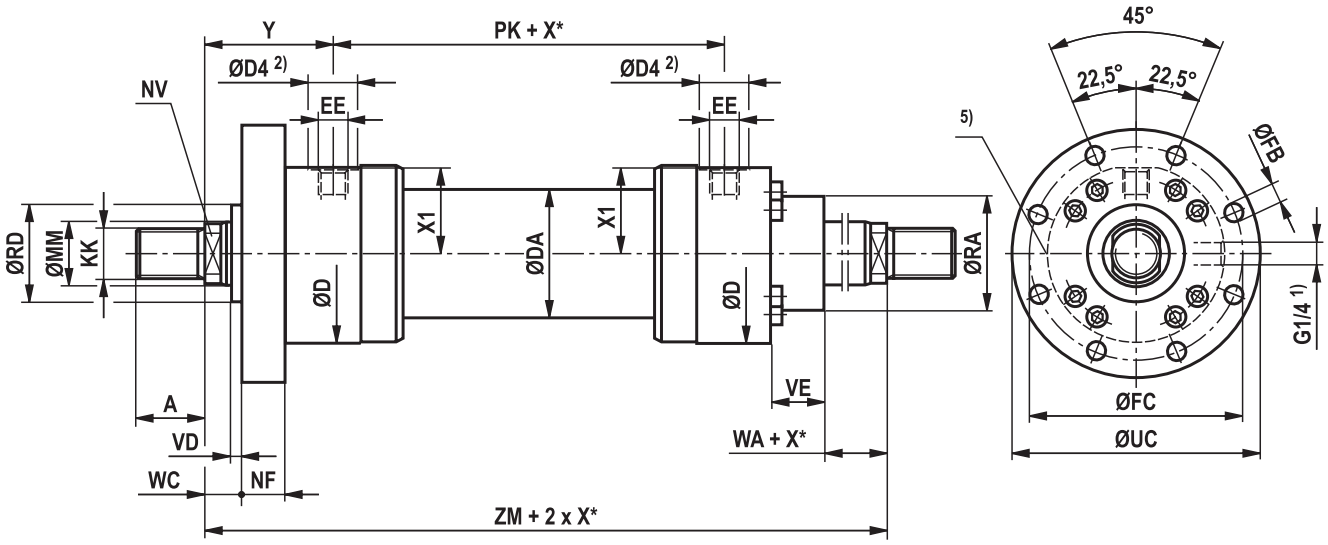

CGH2 MF3 10): with seal design "A", "B" and ØAL 160 - 320 mm

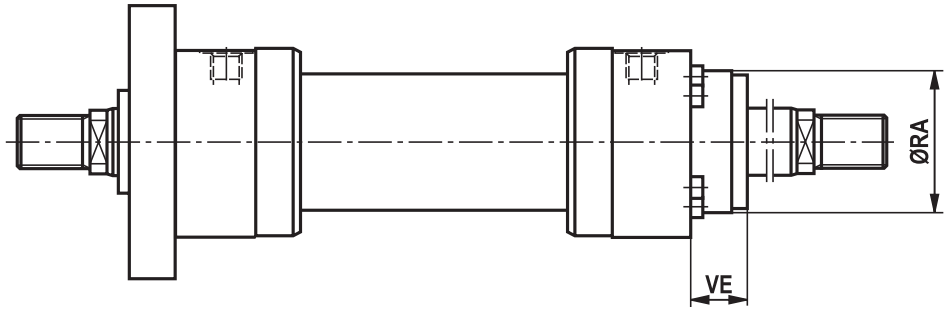

Blocked for new application / Für Neuanwendung gesperrt

Dimensions

Round flange at head CDH2/CGH2: MF3 (dimensions in mm)

ØAL	ØMM	KK	A	NV	ØD	ØDA	ØD4 [2]	EE [4; 16]	EE [4; 17]	Y	PJ	X1	WA
40 [6]	**25/28**	M20x1,5	28	19/22	88	52	34	G1/2	M22x1,5	83	120	41	18
50	**32/36**	M27x2	36	27/30	102	62	34	G1/2	M22x1,5	98	120	48.5	18
63	**40/45**	M33x2	45	32/36	120	78	42	G3/4	M27x2	112	133	56.5	21
80	**50/56**	M42x2	56	41/46	145	95	42	G3/4	M27x2	120	155	69.5	24
100	**63/70**	M48x2	63	50/60	170	125	47	G1	M33x2	134	171	82	27
125	**80/90**	M64x3	85	65/75	206	150	47	G1	M33x2	153	205	100.5	31
140	**90/100**	M72x3	90	75/85	226	170	58	G1 1/4	M42x2	166	219	109.5	31
160	**100/110**	M80x3	95	85/95	265	190	58	G1 1/4	M42x2	185	235	129.5	35
180	**110/125**	M90x3	105	95/110	292	210	58	G1 1/4	M42x2	194	264	143.5	40
200	**125/140**	M100x3	112	110/120	306	235	58	G1 1/4	M42x2	220	278	150.5	40
220 [6]	**140/160**	M125x4	125	120/140	355	270	65	G1 1/2	M48x2 [3]	244	326	174	42
250	**160/180**	M125x4	125	140/160	395	305	65	G1 1/2	M48x2 [3]	257	326	194	42
280 [6]	**180/200**	M160x4	160	160/180	445	343	65	G1 1/2	M48x2 [3]	290	375	220.5	48
320	**200/220**	M160x4	160	180/200	490	394	65	G1 1/2	M48x2 [3]	282	391	243	48

ØAL	ØMM	ØRD f8	WC	VD	NF js13	PK	ZB max	ZM	ØFB H13	ØFC js13	ØUC -1	ØRA [7]	VE [7]	ØRA [8]	VE [8]
40 [6]	**25/28**	52	22	4	25	120	230	286	11	115	138	52	29	88	–
50	**32/36**	63	22	4	25	120	244	316	13.5	132	155	63	29	102	–
63	**40/45**	75	25	4	28	133	274	357	13.5	150	175	75	32	120	–
80	**50/56**	90	28	4	32	155	305	395	17.5	180	210	90	36	145	–
100	**63/70**	110	32	5	36	171	340	439	22	212	250	110	41	170	–
125	**80/90**	132	36	5	40	205	396	511	22	250	290	132	45	206	–
140	**90/100**	145	36	5	40	219	430	551	26	285	330	145	45	226	–
160	**100/110**	160	40	5	45	235	467	605	26	315	360	160	50	200	50
180	**110/125**	185	45	5	50	264	510	652	33	355	410	185	55	220	55
200	**125/140**	200	45	5	56	278	550	718	33	385	440	200	61	235	61
220 [6]	**140/160**	235	50	8	63	326	637	814	39	435	500	235	71	270	71
250	**160/180**	250	50	8	63	326	650	840	39	475	540	250	71	300	71
280 [6]	**180/200**	295	56	8	80	375	752	955	45	555	630	295	88	325	88
320	**200/220**	320	56	8	80	391	760	955	45	600	675	320	88	365	88

ØAL = piston Ø
ØMM = piston rod Ø
X* = stroke length

[1] Bleeding: With view to the piston rod, the position is offset by 90° in relation to the line connection (clockwise)
[2] Ø D4 max. 0.5 mm deep
[3] Thread size does not comply with ISO 6022; M50 x 2 available on request
[4] Flange connections see separate table pages 42 and 43
[5] Throttle valve only with end position cushioning "E" (180° for bleeding)
[6] Piston Ø not standardized
[7] Dimensions for cylinders with seal design M, T, G, L, R, S and V
[8] Dimensions for cylinders with seal design A and B
[10] Double-acting cylinder not standardized
[16] Line connection "B" and "C"
[17] Line connection "M"

Blocked for new application / Für Neuanwendung gesperrt

Dimensions

Round flange at base CDH2: MF4 (dimensions in mm)

CDH2 MF4

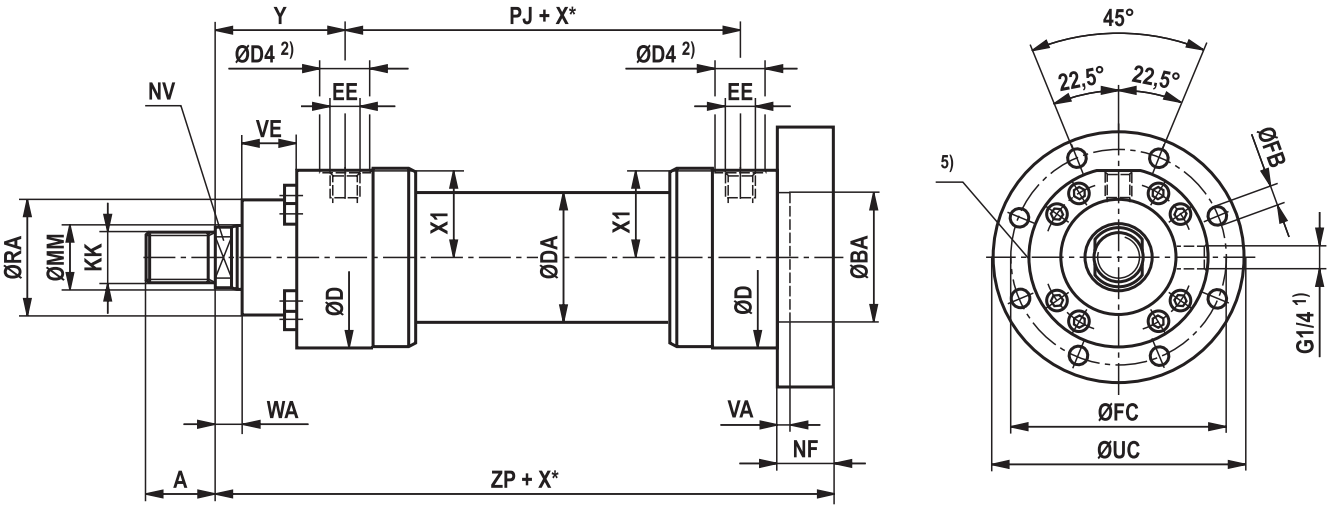

CDH2 MF4: with seal design "A", "B" and ØAL 160 - 320 mm

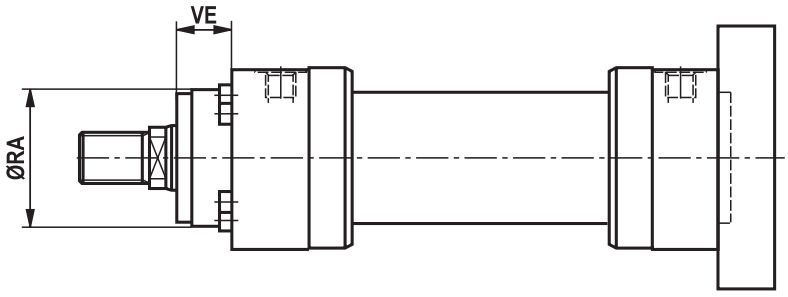

Blocked for new application / Für Neuanwendung gesperrt

Dimensions

Round flange at base CDH2: MF4 (dimensions in mm)

ØAL	ØMM	KK	A	NV	ØD	ØDA	ØD4 [2]	EE [4; 16]	EE [4; 17]	Y	PJ	X1	WA
40 [6]	**25/28**	M20x1,5	28	19/22	88	52	34	G1/2	M22x1,5	83	120	41	18
50	**32/36**	M27x2	36	27/30	102	62	34	G1/2	M22x1,5	98	120	48.5	18
63	**40/45**	M33x2	45	32/36	120	78	42	G3/4	M27x2	112	133	56.5	21
80	**50/56**	M42x2	56	41/46	145	95	42	G3/4	M27x2	120	155	69.5	24
100	**63/70**	M48x2	63	50/60	170	125	47	G1	M33x2	134	171	82	27
125	**80/90**	M64x3	85	65/75	206	150	47	G1	M33x2	153	205	100.5	31
140	**90/100**	M72x3	90	75/85	226	170	58	G1 1/4	M42x2	166	219	109.5	31
160	**100/110**	M80x3	95	85/95	265	190	58	G1 1/4	M42x2	185	235	129.5	35
180	**110/125**	M90x3	105	95/110	292	210	58	G1 1/4	M42x2	194	264	143.5	40
200	**125/140**	M100x3	112	110/120	306	235	58	G1 1/4	M42x2	220	278	150.5	40
220 [6]	**140/160**	M125x4	125	120/140	355	270	65	G1 1/2	M48x2 [3]	244	326	174	42
250	**160/180**	M125x4	125	140/160	395	305	65	G1 1/2	M48x2 [3]	257	326	194	42
280 [6]	**180/200**	M160x4	160	160/180	445	343	65	G1 1/2	M48x2 [3]	290	375	220.5	48
320	**200/220**	M160x4	160	180/200	490	394	65	G1 1/2	M48x2 [3]	282	391	243	48

ØAL	ØMM	ZP	NF js13	VA	ØBA H8	ØFB H13	ØFC js13	ØUC -1	ØRA [7]	VE [7]	ØRA [8]	VE [8]
40 [6]	**25/28**	250	25	5	52	11	115	138	52	29	88	–
50	**32/36**	265	25	4	63	13.5	132	155	63	29	102	–
63	**40/45**	298	28	4	75	13.5	150	175	75	32	120	–
80	**50/56**	332	32	5	90	17.5	180	210	90	36	145	–
100	**63/70**	371	36	5	110	22	212	250	110	41	170	–
125	**80/90**	430	40	6	132	22	250	290	132	45	206	–
140	**90/100**	465	40	5	145	26	285	330	145	45	226	–
160	**100/110**	505	45	7	160	26	315	360	160	50	200	50
180	**110/125**	550	50	10	185	33	355	410	185	55	220	55
200	**125/140**	596	56	10	200	33	385	440	200	61	235	61
220 [6]	**140/160**	690	63	10	235	39	435	500	235	71	270	71
250	**160/180**	703	63	10	250	39	475	540	250	71	300	71
280 [6]	**180/200**	822	80	10	295	45	555	630	295	88	325	88
320	**200/220**	830	80	10	320	45	600	675	320	88	365	88

ØAL = piston Ø
ØMM = piston rod Ø
X* = stroke length

1) Bleeding: With view to the piston rod, the position is offset by 90° in relation to the line connection (clockwise)
2) Ø D4 max. 0.5 mm deep
3) Thread size does not comply with ISO 6022; M50 x 2 available on request
4) Flange connections see separate table pages 42 and 43
5) Throttle valve only with end position cushioning "E" (180° for bleeding)
6) Piston Ø not standardized
7) Dimensions for cylinders with seal design M, T, G, L, R, S and V
8) Dimensions for cylinders with seal design A and B
16) Line connection "B" and "C"
17) Line connection "M"

Blocked for new application / Für Neuanwendung gesperrt

Dimensions

Trunnion mounting CDH2/CGH2: MT4 (dimensions in mm)

CDH2 MT4

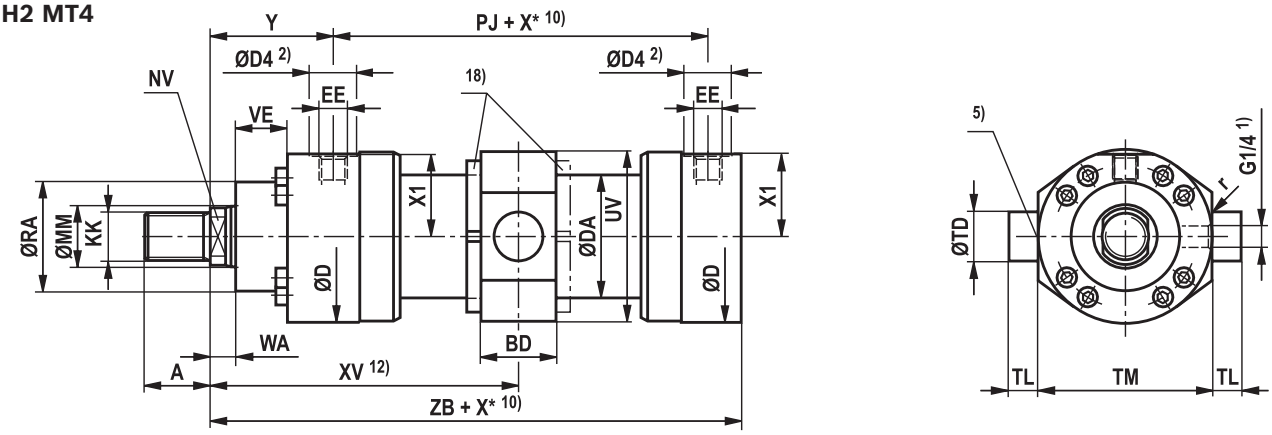

CDH2 MT4: with seal design "A", "B" and ØAL 160 - 320 mm

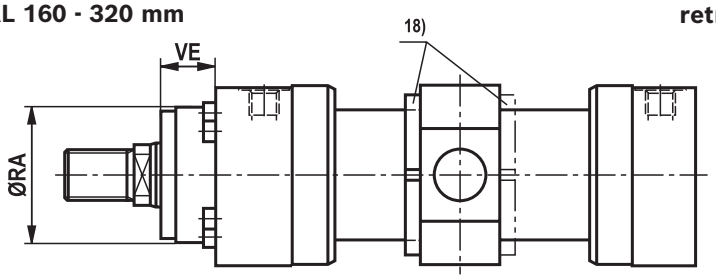

Dimensions for cylinder with piston rod extension "LY" in retracted condition

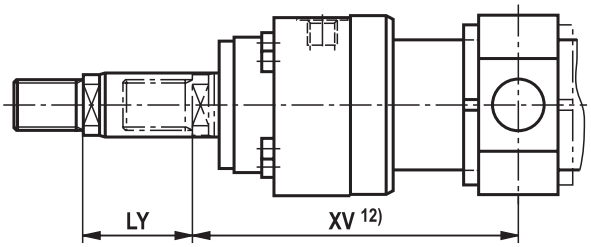

CGH2 MT4 11)

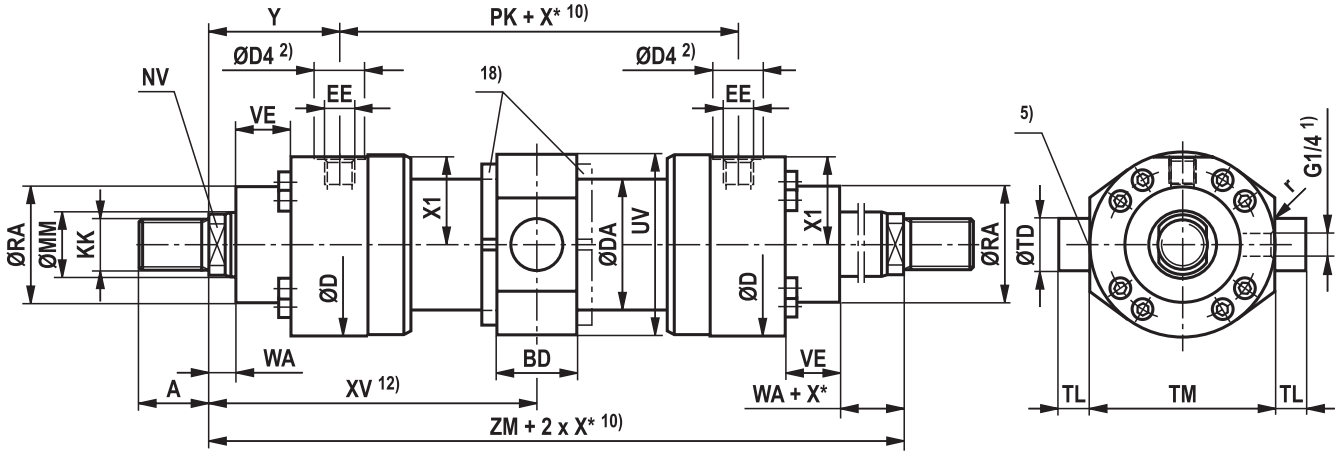

CGH2 MT4 11): with seal design "A", "B" and ØAL 160 - 320 mm

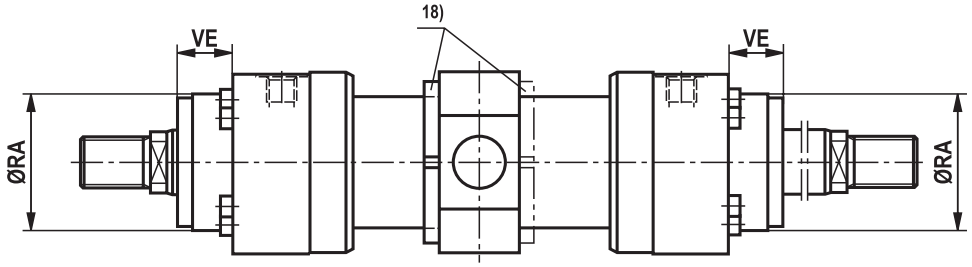

Blocked for new application / Für Neuanwendung gesperrt

Dimensions

Trunnion mountings CDH2/CGH2: MT4 (dimensions in mm)

ØAL	ØMM	KK	A	NV	ØD	ØDA	ØD4 [2]	EE [4; 16]	EE [4; 17]	Y	PJ	X1	WA
40 [6]	**25/28**	M20x1,5	28	19/22	88	52	34	G1/2	M22x1,5	83	120	41	18
50	**32/36**	M27x2	36	27/30	102	62	34	G1/2	M22x1,5	98	120	48.5	18
63	**40/45**	M33x2	45	32/36	120	78	42	G3/4	M27x2	112	133	56.5	21
80	**50/56**	M42x2	56	41/46	145	95	42	G3/4	M27x2	120	155	69.5	24
100	**63/70**	M48x2	63	50/60	170	125	47	G1	M33x2	134	171	82	27
125	**80/90**	M64x3	85	65/75	206	150	47	G1	M33x2	153	205	100.5	31
140	**90/100**	M72x3	90	75/85	226	170	58	G1 1/4	M42x2	166	219	109.5	31
160	**100/110**	M80x3	95	85/95	265	190	58	G1 1/4	M42x2	185	235	129.5	35
180	**110/125**	M90x3	105	95/110	292	210	58	G1 1/4	M42x2	194	264	143.5	40
200	**125/140**	M100x3	112	110/120	306	235	58	G1 1/4	M42x2	220	278	150.5	40
220 [6]	**140/160**	M125x4	125	120/140	355	273	65	G1 1/2	M48x2 [3]	244	326	174	42
250	**160/180**	M125x4	125	140/160	395	305	65	G1 1/2	M48x2 [3]	257	326	194	42
280 [6]	**180/200**	M160x4	160	160/180	445	343	65	G1 1/2	M48x2 [3]	290	375	220.5	48
320	**200/220**	M160x4	160	180/200	490	394	65	G1 1/2	M48x2 [3]	282	391	243	48

ØAL	ØMM	PK	ZB max	ZM	X* min	XV [14] cent	XV [12] min	XV [12] max	BD	UV [15]	ØTD e8	TL js16	TM h12	r	ØRA [7]	VE [7]	ØRA [8]	VE [8]
40 [6]	**25/28**	120	230	286	22	143+X*/2	154	140+X*	38	97	25	20	95	0.8	52	29	88	–
50	**32/36**	120	244	316	32	158+X*/2	174	151+X*	38	111	32	25	112	0.8	63	29	102	–
63	**40/45**	133	274	357	47	178.5+X*/2	202	167+X*	48	129	40	32	125	1	75	32	120	–
80	**50/56**	155	305	395	58	197.5+X*/2	226.5	180.5+X*	58	163	50	40	150	1	90	36	145	–
100	**63/70**	171	340	439	79	219.5+X*/2	259	195+X*	78	188	63	50	180	1.2	110	41	170	–
125	**80/90**	205	396	511	91	255.5+X*/2	301	210+X*	98	234	80	63	224	1.2	132	45	206	–
140	**90/100**	219	430	551	121	275.5+X*/2	336	215+X*	118	257	90	70	265	1.5	145	45	226	–
160	**100/110**	235	467	605	142	302.5+X*/2	373.5	231.5+X*	128	287	100	80	280	1.5	160	50	200	50
180	**110/125**	264	510	652	158	326+X*/2	405	247+X*	138	328	110	90	320	1.5	185	55	220	55
200	**125/140**	278	550	718	204	359+X*/2	461	257+X*	178	343	125	100	335	1.5	200	61	235	61
220 [6]	**140/160**	326	637	814	200	407+X*/2	507	307+X*	180	393	160	125	385	1.5	235	71	270	71
250	**160/180**	326	650	840	210	420+X*/2	525	315+X*	180	433	160	125	425	1.5	250	71	300	71
280 [6]	**180/200**	375	752	955	241	477.5+X*/2	598	357+X*	220	486	200	160	480	2	295	88	325	88
320	**200/220**	391	760	955	245	477.5+X*/2	600	355+X*	220	536	200	160	530	2	320	88	365	88

ØAL = piston Ø
ØMM = piston rod Ø
X* = stroke length
X*min = min. stroke length
With hydraulic cylinders with end position cushioning, observe the notice on page 68!

1) Bleeding: With view to the piston rod, the position is offset by 90° in relation to the line connection (clockwise)
2) Ø D4 max. 0.5 mm deep
3) Thread size does not comply with ISO 6022; M50 x 2 available on request
4) Flange connections see separate table pages 42 and 43
5) Throttle valve only with end position cushioning "E" (180° for bleeding)
6) Piston Ø not standardized
7) Dimensions for cylinders with seal design M, T, G, L, R, S and V
8) Dimensions for cylinders with seal design A and B
10) Observe the min. stroke length "X*min"
11) Double-acting cylinder not standardized
12) When ordering, always specify the "XV" dimension in the clear text. Preferred XV dimension: Observe the trunnion position in the cylinder center XVmin and XVmax
14) XVcent recommendation: Trunnion position in cylinder center
15) The specified dimensions are maximum values, tolerance classes 342 according to ISO 9013 Thermal cutting
16) Line connection "B" and "C"
17) Line connection "M"
18) Trunnion nut with ØAL ≥ 125 mm either at head or at base side depending on the position of the trunnion (XV)

☞ **Installation information:** During installation, it must be ensured that the trunnion bearings are installed up to the trunnion shoulders. Any variation may reduce the product's service life.

Blocked for new application / Für Neuanwendung gesperrt

Dimensions

Foot mounting CDH2/CGH2: MS2 (dimensions in mm)

CDH2 MS2 [2; 11)]

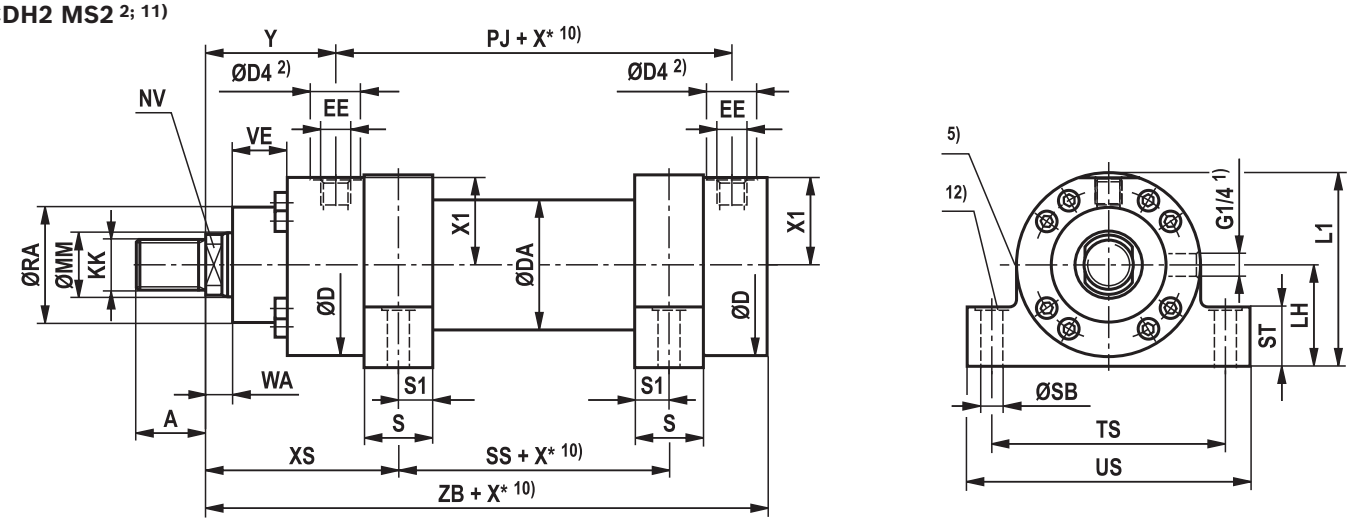

CDH2 MS2 [11)]: with seal design "A", "B" and ØAL 160 - 320 mm

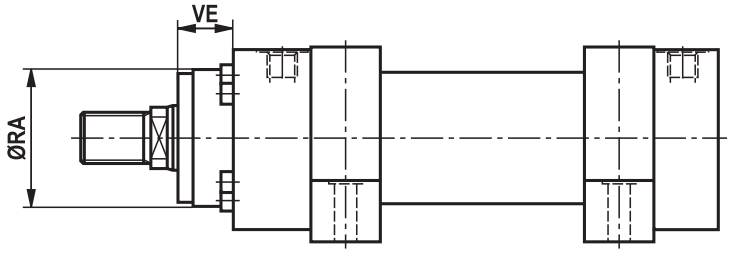

CGH2 MS2 [11)]

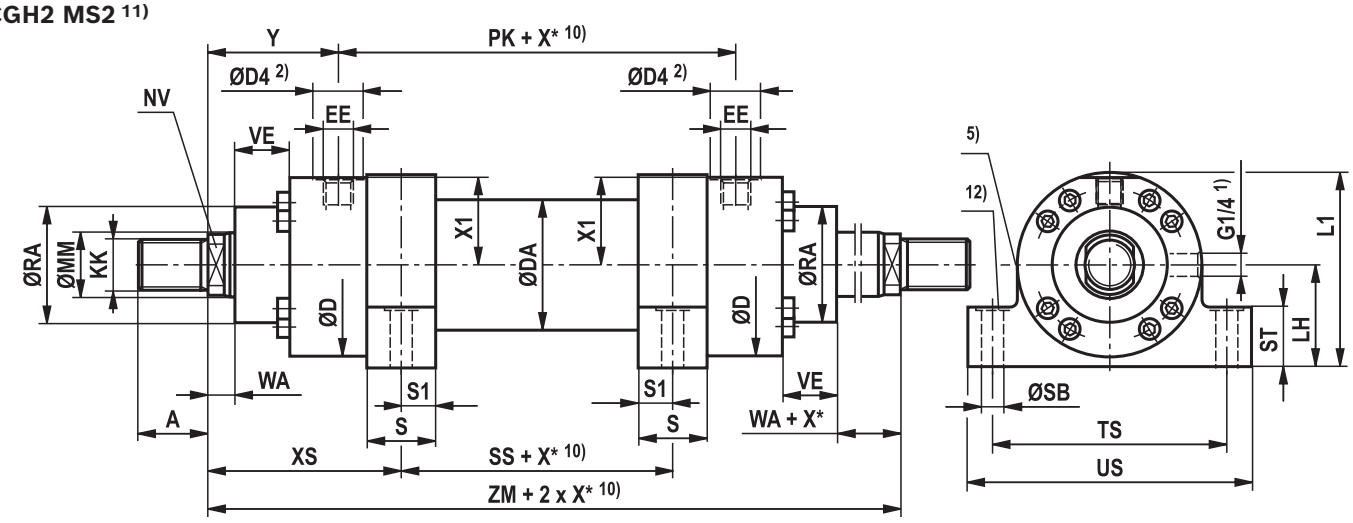

CGH2 MS2 [11)]: with seal design "A", "B" and ØAL 160 - 320 mm

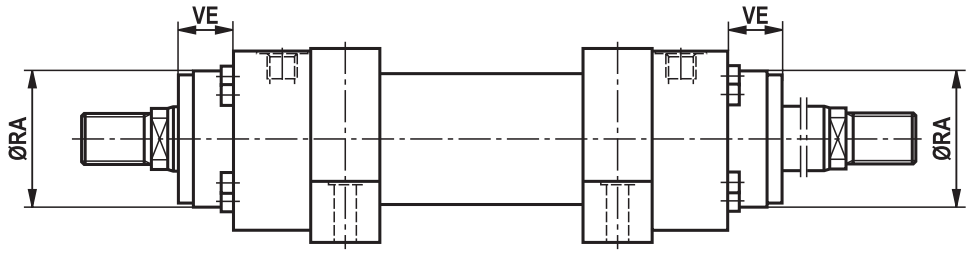

Blocked for new application / Für Neuanwendung gesperrt

Dimensions

Foot mounting CDH2/CGH2: MS2 (dimensions in mm)

ØAL	ØMM	KK	A	NV	ØD	ØDA	ØD4 [2]	EE [4; 16]	EE [4; 17]	Y	PJ	X1	WA
40 [6]	**25/28**	M20x1,5	28	19/22	88	52	34	G1/2	M22x1,5	83	120	41	18
50	**32/36**	M27x2	36	27/30	102	62	34	G1/2	M22x1,5	98	120	48.5	18
63	**40/45**	M33x2	45	32/36	120	78	42	G3/4	M27x2	112	133	56.5	21
80	**50/56**	M42x2	56	41/46	145	95	42	G3/4	M27x2	120	155	69.5	24
100	**63/70**	M48x2	63	50/60	170	125	47	G1	M33x2	134	171	82	27
125	**80/90**	M64x3	85	65/75	206	150	47	G1	M33x2	153	205	100.5	31
140	**90/100**	M72x3	90	75/85	226	170	58	G1 1/4	M42x2	166	219	109.5	31
160	**100/110**	M80x3	95	85/95	265	190	58	G1 1/4	M42x2	185	235	129.5	35
180	**110/125**	M90x3	105	95/110	292	210	58	G1 1/4	M42x2	194	264	143.5	40
200	**125/140**	M100x3	112	110/120	306	235	58	G1 1/4	M42x2	220	278	150.5	40
220 [6]	**140/160**	M125x4	125	120/140	355	270	65	G1 1/2	M48x2 [3]	244	326	174	42
250	**160/180**	M125x4	125	140/160	395	305	65	G1 1/2	M48x2 [3]	257	326	194	42
280 [6]	**180/200**	M160x4	160	160/180	445	343	65	G1 1/2	M48x2 [3]	290	375	220.5	48
320	**200/220**	M160x4	160	180/200	490	394	65	G1 1/2	M48x2 [3]	282	391	243	48

ØAL	ØMM	PK	XS	ZB max	ZM	SS	X* [10] min	S	S1	ØSB H13	ST	TS js13	US max	LH	L1	ØRA [7]	VE [7]	ØRA [8]	VE [8]
40 [6]	**25/28**	120	118	230	286	50	1	30	15	11	32	110	140	45	93	52	29	88	–
50	**32/36**	120	135.5	244	316	45	1	35	17.5	11	37	130	161	55	110	63	29	102	–
63	**40/45**	133	154	274	357	49	1	40	20	13.5	42	150	183	65	129	75	32	120	–
80	**50/56**	155	171.5	305	395	52	2	50	25	17.5	47	180	220	75	149	90	36	145	–
100	**63/70**	171	189	340	439	61	3	60	30	22	57	210	260	90	181	110	41	170	–
125	**80/90**	205	218	396	511	75	1	70	35	26	67	255	313	105	215	132	45	206	–
140	**90/100**	219	240.5	430	551	70	19	85	42.5	30	72	290	359	115	235	145	45	226	–
160	**100/110**	235	270	467	605	65	44	105	52.5	33	77	330	402	135	277	160	50	200	50
180	**110/125**	264	291.5	510	652	69	50	115	57.5	40	92	360	445	150	305	185	55	220	55
200	**125/140**	278	322.5	550	718	73	56	125	62.5	40	97	385	471	160	322	200	61	235	61
220 [6]	**140/160**	326	369.5	637	814	75	100	155	77.5	45	102	445	541	185	373	235	71	270	71
250	**160/180**	326	382.5	650	840	75	100	155	77.5	52	112	500	610	205	414	250	71	300	71
280 [6]	**180/200**	375	415.5	752	955	124	51	155	77.5	52	142	550	661	235	469	295	88	325	88
320	**200/220**	391	435	760	955	85	125	190	95	62	142	610	732	255	512	320	88	365	88

ØAL = piston Ø
ØMM = piston rod Ø
X* = stroke length
X*min = min. stroke length
With hydraulic cylinders with end position cushioning, observe the notice on page 68!

[1] Bleeding: With view to the piston rod, the position is offset by 90° in relation to the line connection (clockwise)
[2] Ø D4 max. 0.5 mm deep
[3] Thread size does not comply with ISO 6022; M50 x 2 available on request
[4] Flange connections see separate table pages 42 and 43
[5] Throttle valve only with end position cushioning "E" (180° for bleeding)
[6] Piston Ø not standardized
[7] Dimensions for cylinders with seal design M, T, G, L, R, S and V
[8] Dimensions for cylinders with seal design A and B
[10] Observe the min. stroke length "X*min"
[11] Not standardized
[12] Recess 2 mm deep, for hexagon socket head cap screws; ISO 4762 – The screws must not be subjected to shear force. Force introduction via additional external fitting strip
[16] Line connection "B" and "C"
[17] Line connection "M"

Blocked for new application / Für Neuanwendung gesperrt

Dimensions

Swivel eye at base CSH2: MP3 (dimensions in mm)

CSH2 MP3

for position measurement system output "C", "F" and "D"

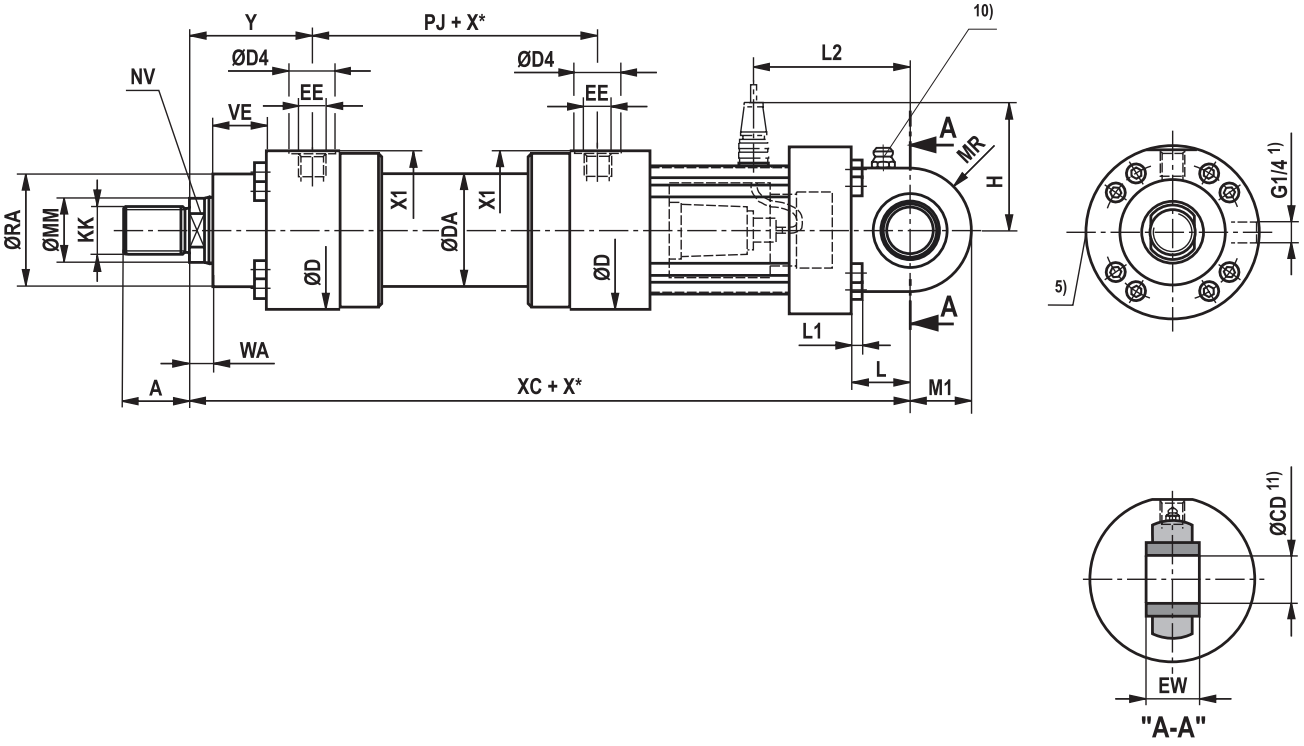

CSH2 MP3

for position measurement system output "N" and "P"

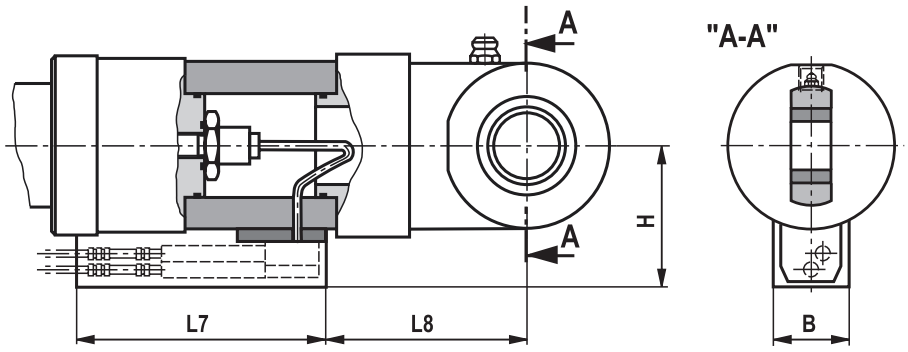

Blocked for new application / Für Neuanwendung gesperrt

Dimensions

Swivel eye at base CSH2: MP3 (dimensions in mm)

ØAL	ØMM	KK	A	NV	ØD	ØDA	ØD4 [2]	EE [4; 16]	EE [4; 17]	Y	PJ	X1	WA	XC	X* max
40 [6]	**28**	M20x1,5	28	22	88	52	34	G1/2	M22x1,5	83	120	41	18	447	1000
50	**32/36**	M27x2	36	27/30	102	62	34	G1/2	M22x1,5	98	120	48.5	18	470	1000
63	**40/45**	M33x2	45	32/36	120	78	42	G3/4	M27x2	112	133	56.5	21	526	2000
80	**50/56**	M42x2	56	41/46	145	95	42	G3/4	M27x2	120	155	69.5	24	580	2000
100	**63/70**	M48x2	63	50/60	170	125	47	G1	M33x2	134	171	82	27	617	3000
125	**80/90**	M64x3	85	65/75	206	150	47	G1	M33x2	153	205	100.5	31	693	3000
140	**90/100**	M72x3	90	75/85	226	170	58	G1 1/4	M42x2	166	219	109.5	31	755	3000
160	**100/110**	M80x3	95	85/95	265	190	58	G1 1/4	M42x2	185	235	129.5	35	787	3000
180	**110/125**	M90x3	105	95/110	292	210	58	G1 1/4	M42x2	194	264	143.5	40	855	3000
200	**125/140**	M100x3	112	110/120	306	235	58	G1 1/4	M42x2	220	278	150.5	40	926	3000
220 [6]	**140/160**	M125x4	125	120/140	355	270	65	G1 1/2	M48x2 [3]	244	326	174	42	1100	3000
250	**160/180**	M125x4	125	140/160	395	305	65	G1 1/2	M48x2 [3]	257	326	194	42	1115	3000
280 [6]	**180/200**	M160x4	160	160/180	445	343	65	G1 1/2	M48x2 [3]	290	375	220.5	48	1295	3000
320	**200/220**	M160x4	160	180/200	490	394	65	G1 1/2	M48x2 [3]	282	391	243	48	1300	3000

ØAL	ØMM	L	L1	MR	M1	ØCD H9	EW h12	ØRA	VE	L2	H [13]	H [14]	L7	L8	B
40 [6]	**28**	53	8	32	32	25	25	52	29	124	106	115	200	101	64
50	**32/36**	61	8	40	40	32	32	63	29	132	113	120	200	109	64
63	**40/45**	74	8	50	50	40	40	75	32	150	122	130	200	127	64
80	**50/56**	90	10	63	63	50	50	90	36	176.5	133	125	200	149	64
100	**63/70**	102	12	71	71	63	63	110	41	192	148	135	200	164	64
125	**80/90**	124	16	90	90	80	80	132	45	227	166	145	200	203	64
140	**90/100**	149	16	100	100	90	90	145	45	262	176	155	200	236	64
160	**100/110**	150	16	112	112	100	100	160	50	269.5	196	165	200	237	64
180	**110/125**	180	20	129	129	110	110	185	55	307	210	175	200	274	64
200	**125/140**	206	20	145	145	125	125	200	61	333	217	190	200	302	64
220 [6]	**140/160**	253	20	179 [12]	187 [12]	160	160	235	71	418	254	205	200	386	64
250	**160/180**	253	24	179 [12]	187 [12]	160	160	250	71	420	269	220	200	387	64
280 [6]	**180/200**	320	30	230 [12]	240 [12]	200	200	295	88	510	286	280	200	475	64
320	**200/220**	320	30	231 [12]	241 [12]	200	200	320	88	520	309	300	200	485	64

ØAL = piston Ø
ØMM = piston rod Ø
X* = stroke length
X*max = max. stroke length

1) Bleeding: With view to the piston rod, the position is offset by 90° in relation to the line connection (clockwise)
2) Ø D4 max. 0.5 mm deep
3) Thread size does not comply with ISO 6022; M50 x 2 available on request
4) Flange connections see separate table pages 42 and 43
5) Throttle valve only with end position cushioning "E" (180° for bleeding)
6) Piston Ø not standardized
10) Standard version "W" Grease nipple, cone head form A according to DIN 71412
11) Related bolt Ø f8
12) The specified dimensions are maximum values, tolerance classes 342 according to ISO 9013 Thermal cutting
13) Dimensions for position transducer output "N" and "P"
14) Dimensions for position transducer output "C", "F" and "D"
16) Line connection "B" and "C"
17) Line connection "M"

Blocked for new application / Für Neuanwendung gesperrt

Dimensions

Self-aligning clevis at base CSH2: MP5 (dimensions in mm)

CSH2 MP5

for position measurement system output "C", "F" and "D"

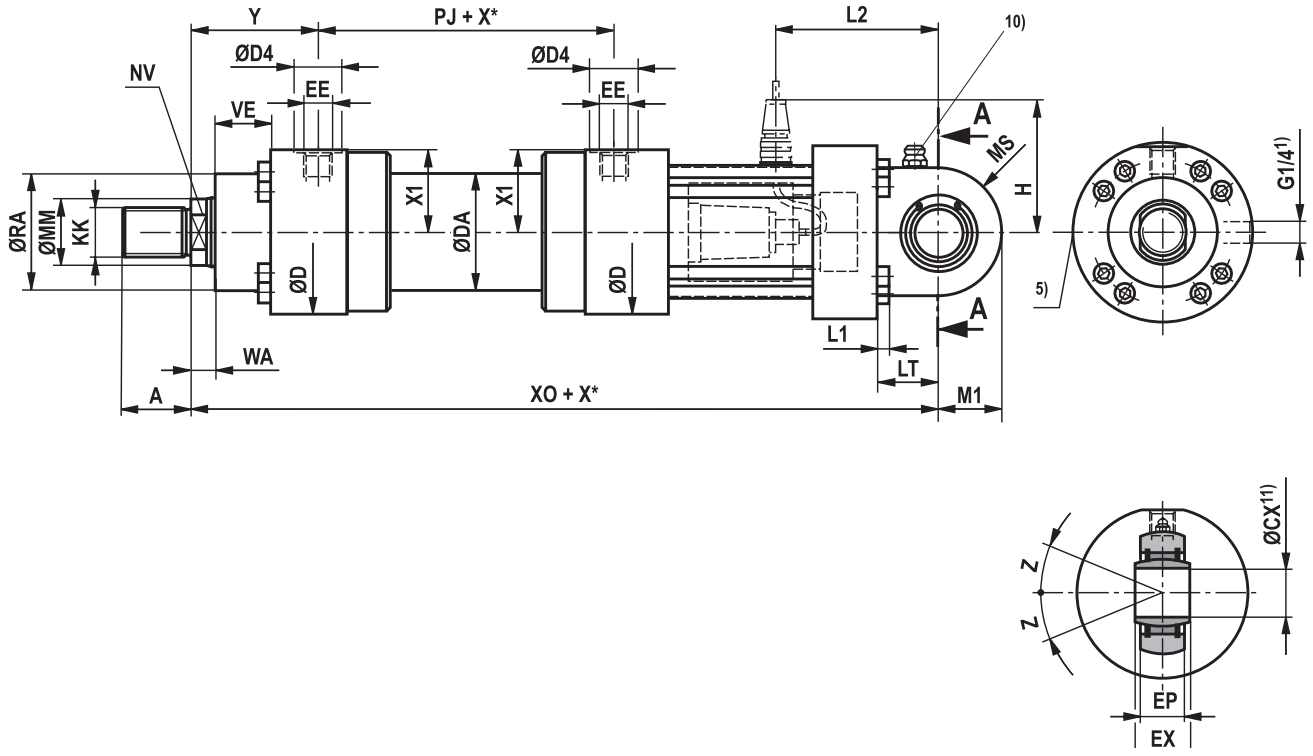

CSH2 MP5

for position measurement system output "N" and "P"

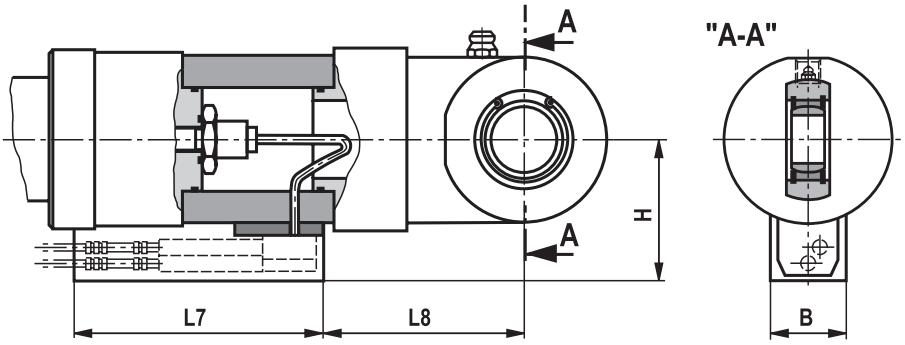

Blocked for new application / Für Neuanwendung gesperrt

Dimensions

Self-aligning clevis at base CSH2: MP5 (dimensions in mm)

ØAL	ØMM	KK	A	NV	ØD	ØDA	ØD4 2)	EE 4; 16)	EE 4; 17	Y	PJ	X1	WA	XO	X* max
40 6)	**28**	M20x1,5	28	22	88	52	34	G1/2	M22x1,5	83	120	41	18	447	1000
50	**32/36**	M27x2	36	27/30	102	62	34	G1/2	M22x1,5	98	120	48.5	18	470	1000
63	**40/45**	M33x2	45	32/36	120	78	42	G3/4	M27x2	112	133	56.5	21	526	2000
80	**50/56**	M42x2	56	41/46	145	95	42	G3/4	M27x2	120	155	69.5	24	580	2000
100	**63/70**	M48x2	63	50/60	170	125	47	G1	M33x2	134	171	82	27	617	3000
125	**80/90**	M64x3	85	65/75	206	150	47	G1	M33x2	153	205	100.5	31	693	3000
140	**90/100**	M72x3	90	75/85	226	170	58	G1 1/4	M42x2	166	219	109.5	31	755	3000
160	**100/110**	M80x3	95	85/95	265	190	58	G1 1/4	M42x2	185	235	129.5	35	787	3000
180	**110/125**	M90x3	105	95/110	292	210	58	G1 1/4	M42x2	194	264	143.5	40	855	3000
200	**125/140**	M100x3	112	110/120	306	235	58	G1 1/4	M42x2	220	278	150.5	40	926	3000
220 6)	**140/160**	M125x4	125	120/140	355	270	65	G1 1/2	M48x2 3)	244	326	174	42	1100	3000
250	**160/180**	M125x4	125	140/160	395	305	65	G1 1/2	M48x2 3)	257	326	194	42	1115	3000
280 6)	**180/200**	M160x4	160	160/180	445	343	65	G1 1/2	M48x2 3)	290	375	220.5	48	1295	3000
320	**200/220**	M160x4	160	180/200	490	394	65	G1 1/2	M48x2 3)	282	391	243	48	1300	3000

ØAL	ØMM	LT	L1	MS	M1	ØCX 11) H7	EP	EX h12	ØRA	VE	Z	L2	H 13)	H 14)	L7	L8	B
40 6)	**28**	53	8	32	32	25	22	25	52	29	2 °	124	106	115	200	101	64
50	**32/36**	61	8	40	40	32	27	32	63	29	4 °	132	113	120	200	109	64
63	**40/45**	74	8	50	50	40	32	40	75	32	4 °	150	122	130	200	127	64
80	**50/56**	90	10	63	63	50	40	50	90	36	4 °	176.5	133	125	200	149	64
100	**63/70**	102	12	71	71	63	52	63	110	41	4 °	192	148	135	200	164	64
125	**80/90**	124	16	90	90	80	66	80	132	45	4 °	227	166	145	200	203	64
140	**90/100**	149	16	100	100	90	72	90	145	45	4 °	262	176	155	200	236	64
160	**100/110**	150	16	112	112	100	84	100	160	50	4 °	269.5	196	165	200	237	64
180	**110/125**	180	20	129	129	110	88	110	185	55	4 °	307	210	175	200	274	64
200	**125/140**	206	20	145	145	125	102	125	200	61	4 °	333	217	190	200	302	64
220 6)	**140/160**	253	20	179 12)	187 12)	160	130	160	235	71	4 °	418	254	205	200	386	64
250	**160/180**	253	24	179 12)	187 12)	160	130	160	250	71	4 °	420	269	220	200	387	64
280 6)	**180/200**	320	30	230 12)	240 12)	200	138	200	295	88	4 °	510	286	280	200	475	64
320	**200/220**	320	30	231 12)	241 12)	200	162	200	320	88	4 °	520	309	300	200	485	64

ØAL = piston Ø
ØMM = piston rod Ø
X* = stroke length
X*max = max. stroke length

1) Bleeding: With view to the piston rod, the position is offset by 90° in relation to the line connection (clockwise)
2) Ø D4 max. 0.5 mm deep
3) Thread size does not comply with ISO 6022; M50 x 2 available on request
4) Flange connections see separate table pages 42 and 43
5) Throttle valve only with end position cushioning "E" (180° for bleeding)
6) Piston Ø not standardized
10) Standard version "W" Grease nipple, cone head form A according to DIN 71412
11) Related bolt Ø m6
12) The specified dimensions are maximum values, tolerance classes 342 according to ISO 9013 Thermal cutting
13) Dimensions for position transducer output "N" and "P"
14) Dimensions for position transducer output "C", "F" and "D"
16) Line connection "B" and "C"
17) Line connection "M"

Blocked for new application / Für Neuanwendung gesperrt

Dimensions

Round flange at head CSH2: MF3 (dimensions in mm)

CSH2 MF3

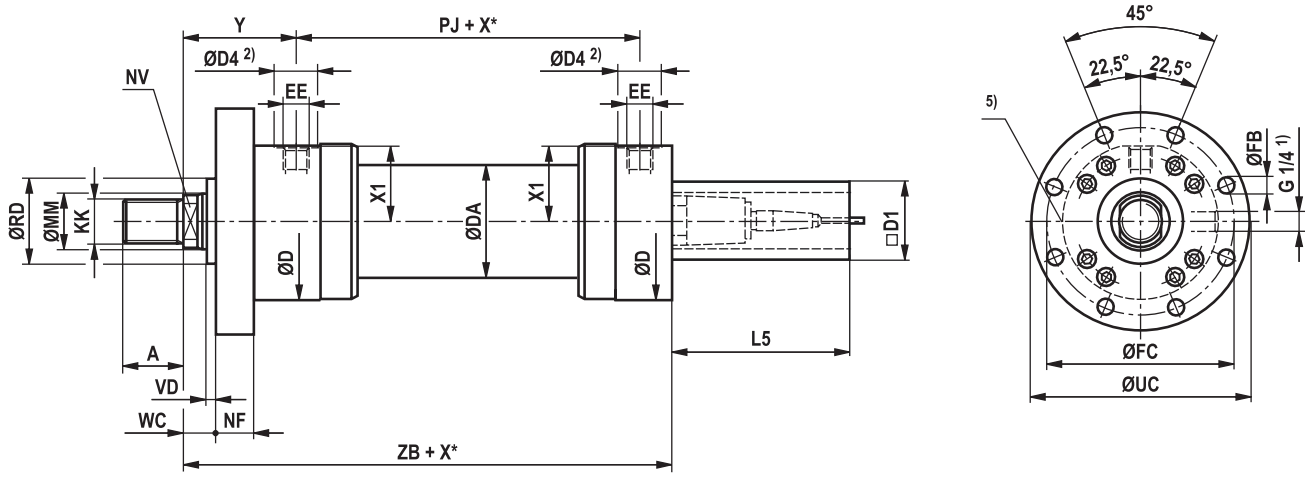

Blocked for new application / Für Neuanwendung gesperrt

Dimensions

Round flange at head CSH2: MF3 (dimensions in mm)

ØAL	ØMM	KK	A	NV	ØD	ØDA	ØD4 [2]	EE [4; 16]	EE [4; 17]	Y	PJ	X1	X* max	L5	D1 max
40 [6]	**28**	M20x1,5	28	22	88	52	34	G1/2	M22x1,5	83	120	41	1000	166	80
50	**32/36**	M27x2	36	27/30	102	62	34	G1/2	M22x1,5	98	120	48.5	1000	166	96
63	**40/45**	M33x2	45	32/36	120	78	42	G3/4	M27x2	112	133	56.5	2000	166	96
80	**50/56**	M42x2	56	41/46	145	95	42	G3/4	M27x2	120	155	69.5	2000	166	96
100	**63/70**	M48x2	63	50/60	170	125	47	G1	M33x2	134	171	82	3000	166	96
125	**80/90**	M64x3	85	65/75	206	150	47	G1	M33x2	153	205	100.5	3000	166	96
140	**90/100**	M72x3	90	75/85	226	170	58	G1 1/4	M42x2	166	219	109.5	3000	166	96
160	**100/110**	M80x3	95	85/95	265	190	58	G1 1/4	M42x2	185	235	129.5	3000	166	96
180	**110/125**	M90x3	105	95/110	292	210	58	G1 1/4	M42x2	194	264	143.5	3000	166	96
200	**125/140**	M100x3	112	110/120	306	235	58	G1 1/4	M42x2	220	278	150.5	3000	166	96
220 [6]	**140/160**	M125x4	125	120/140	355	270	65	G1 1/2	M48x2 [3]	244	326	174	3000	166	96
250	**160/180**	M125x4	125	140/160	395	305	65	G1 1/2	M48x2 [3]	257	326	194	3000	166	96
280 [6]	**180/200**	M160x4	160	160/180	445	343	65	G1 1/2	M48x2 [3]	290	375	220.5	3000	166	96
320	**200/220**	M160x4	160	180/200	490	394	65	G1 1/2	M48x2 [3]	282	391	243	3000	166	96

ØAL	ØMM	ØRD f8	WC	VD	NF js13	ZB max	ØFB H13	ØFC js13	ØUC -1
40 [6]	**28**	52	22	4	25	239	11	115	138
50	**32/36**	63	22	4	25	254	13.5	132	155
63	**40/45**	75	25	4	28	299	13.5	150	175
80	**50/56**	90	28	4	32	332.5	17.5	180	210
100	**63/70**	110	32	5	36	362	22	212	250
125	**80/90**	132	36	5	40	410	22	250	290
140	**90/100**	145	36	5	40	440	26	285	330
160	**100/110**	160	40	5	45	472.5	26	315	360
180	**110/125**	185	45	5	50	510	33	355	410
200	**125/140**	200	45	5	56	550	33	385	440
220 [6]	**140/160**	235	50	8	63	637	39	435	500
250	**160/180**	250	50	8	63	650	39	475	540
280 [6]	**180/200**	295	56	8	80	752	45	555	630
320	**200/220**	320	56	8	80	760	45	600	675

ØAL = piston Ø
ØMM = piston rod Ø
X* = stroke length
X*max = max. stroke length

[1] Bleeding: With view to the piston rod, the position is offset by 90° in relation to the line connection (clockwise)
[2] Ø D4 max. 0.5 mm deep
[3] Thread size does not comply with ISO 6022; M50 x 2 available on request
[4] Flange connections see separate table pages 42 and 43
[5] Throttle valve only with end position cushioning "E" (180° for bleeding)
[6] Piston Ø not standardized
[16] Line connection "B" and "C"
[17] Line connection "M"

Blocked for new application / Für Neuanwendung gesperrt

Dimensions

Round flange at base CSH2: MF4 (dimensions in mm)

CSH2 MF4; ØAL 40-100 mm

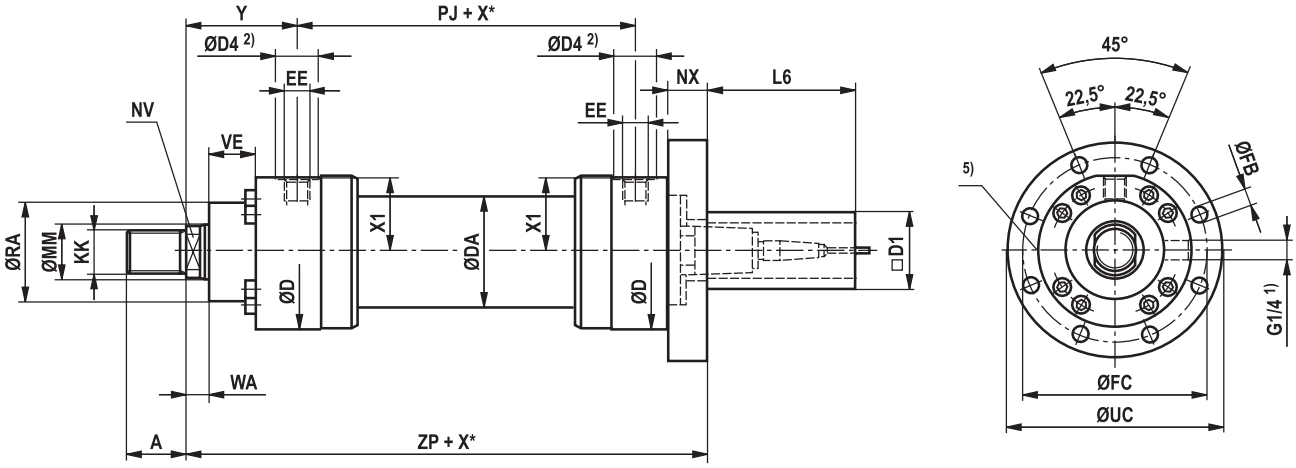

CSH2 MF4; ØAL 125-320 mm

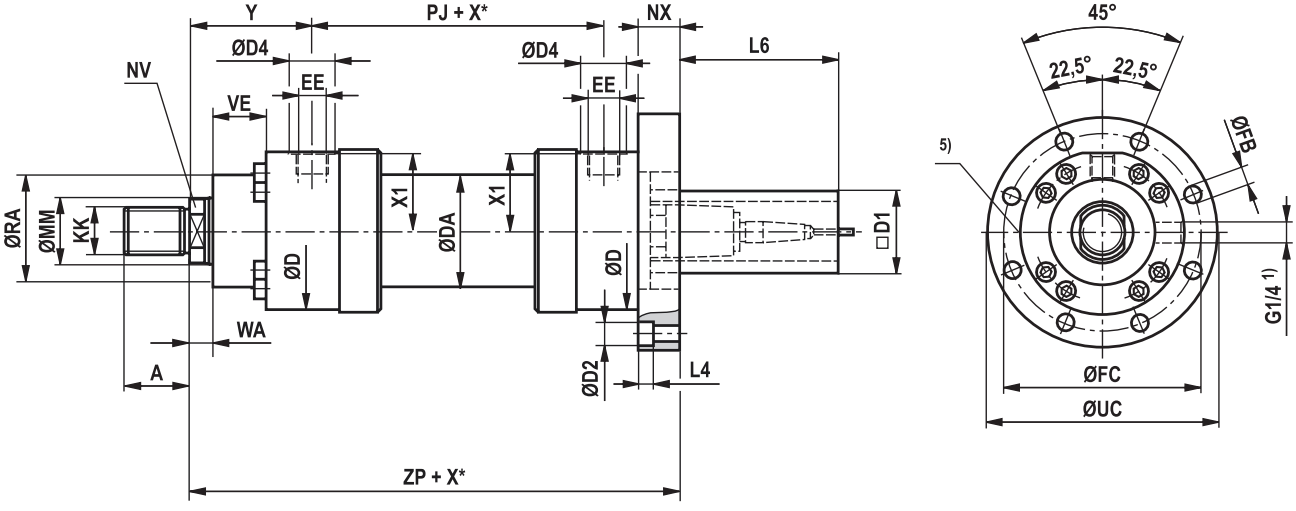

Blocked for new application / Für Neuanwendung gesperrt

Dimensions

Round flange at base CSH2: MF4 (dimensions in mm)

ØAL	ØMM	KK	A	NV	ØD	ØDA	ØD4 [2]	EE [4; 16]	EE [4; 17]	Y	PJ	X1	WA	X* max	L4
40 [6]	**28**	M20x1,5	28	22	88	52	34	G1/2	M22x1,5	83	120	41	18	1000	3
50	**32/36**	M27x2	36	27/30	102	62	34	G1/2	M22x1,5	98	120	48.5	18	1000	3
63	**40/45**	M33x2	45	32/36	120	78	42	G3/4	M27x2	112	133	56.5	21	2000	0
80	**50/56**	M42x2	56	41/46	145	95	42	G3/4	M27x2	120	155	69.5	24	2000	0
100	**63/70**	M48x2	63	50/60	170	125	47	G1	M33x2	134	171	82	27	3000	0
125	**80/90**	M64x3	85	65/75	206	150	47	G1	M33x2	153	205	100.5	31	3000	21.5
140	**90/100**	M72x3	90	75/85	226	170	58	G1 1/4	M42x2	166	219	109.5	31	3000	25.5
160	**100/110**	M80x3	95	85/95	265	190	58	G1 1/4	M42x2	185	235	129.5	35	3000	25.5
180	**110/125**	M90x3	105	95/110	292	210	58	G1 1/4	M42x2	194	264	143.5	40	3000	32
200	**125/140**	M100x3	112	110/120	306	235	58	G1 1/4	M42x2	220	278	150.5	40	3000	32
220 [6]	**140/160**	M125x4	125	120/140	355	270	65	G1 1/2	M48x2 [3]	244	326	174	42	3000	38
250	**160/180**	M125x4	125	140/160	395	305	65	G1 1/2	M48x2 [3]	257	326	194	42	3000	38
280 [6]	**180/200**	M160x4	160	160/180	445	343	65	G1 1/2	M48x2 [3]	290	375	220.5	48	3000	44
320	**200/220**	M160x4	160	180/200	490	394	65	G1 1/2	M48x2 [3]	282	391	243	48	3000	44

ØAL	ØMM	L6	ØD2	D1 max	ZP	NX js13	ØFB H13	ØFC js13	ØUC -1	ØRA	VE
40 [6]	**28**	166	18	80	262	28	11	115	138	52	29
50	**32/36**	166	20	96	278	28	13.5	132	155	63	29
63	**40/45**	166	0	96	313	28	13.5	150	175	75	32
80	**50/56**	166	0	96	350	32	17.5	180	210	90	36
100	**63/70**	138	0	96	390	36	22	212	250	110	41
125	**80/90**	131	33	96	445	55	22	250	290	132	45
140	**90/100**	121	40	96	485	60	26	285	330	145	45
160	**100/110**	113.5	40	96	525	65	26	315	360	160	50
180	**110/125**	106	48	96	570	70	33	355	410	185	55
200	**125/140**	100	48	96	616	76	33	385	440	200	61
220 [6]	**140/160**	88	57	96	715	88	39	435	500	235	71
250	**160/180**	86	57	96	730	90	39	475	540	250	71
280 [6]	**180/200**	61	66	96	857	115	45	555	630	295	88
320	**200/220**	61	66	96	865	115	45	600	675	320	88

ØAL = piston Ø
ØMM = piston rod Ø
X* = stroke length
X*max = max. stroke length

[1] Bleeding: With view to the piston rod, the position is offset by 90° in relation to the line connection (clockwise)
[2] Ø D4 max. 0.5 mm deep
[3] Thread size does not comply with ISO 6022; M50 x 2 available on request
[4] Flange connections see separate table pages 42 and 43
[5] Throttle valve only with end position cushioning "E" (180° for bleeding)
[6] Piston Ø not standardized
[16] Line connection "B" and "C"
[17] Line connection "M"

Blocked for new application / Für Neuanwendung gesperrt

Dimensions

Trunnion mounting CSH2: MT4 (dimensions in mm)

CSH2 MT4

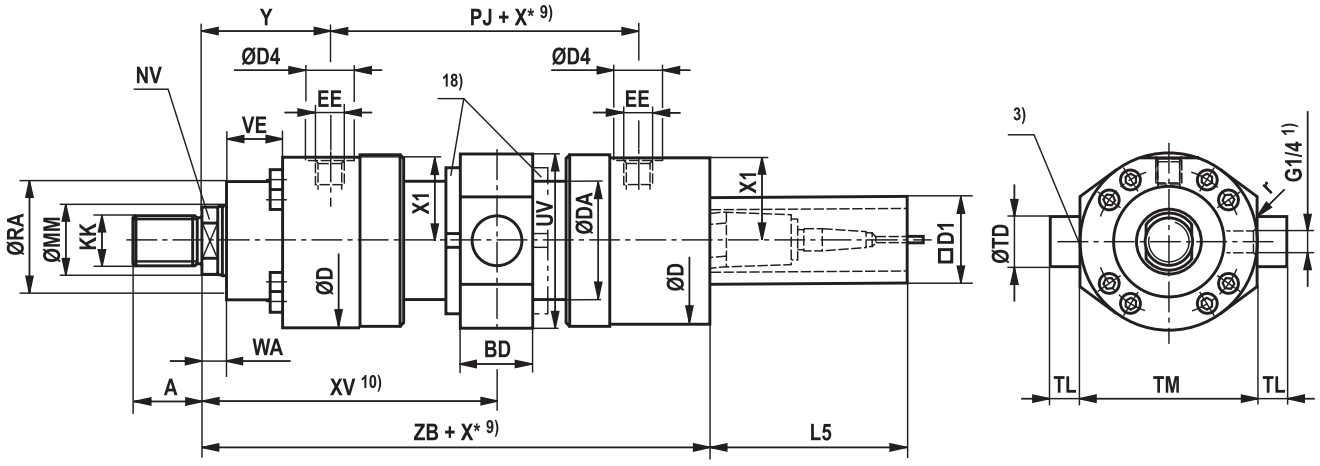

Dimensions for cylinder with piston rod extension "LY" in retracted condition

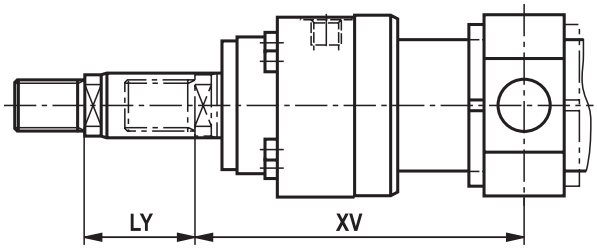

☞ **Installation information:** During installation, it must be ensured that the trunnion bearings are installed up to the trunnion shoulders. Any variation may reduce the product's service life.

Blocked for new application / Für Neuanwendung gesperrt

Dimensions

Trunnion mounting CSH2: MT4 (dimensions in mm)

ØAL	ØMM	KK	A	NV	ØD	ØDA	ØD4 [2]	EE [4; 16]	EE [4; 17]	Y	PJ	X1	WA	X* max	L5	D1 max
40 [6]	**28**	M20x1,5	28	22	88	52	34	G1/2	M22x1,5	83	120	41	18	1000	166	80
50	**32/36**	M27x2	36	27/30	102	62	34	G1/2	M22x1,5	98	120	48.5	18	1000	166	96
63	**40/45**	M33x2	45	32/36	120	78	42	G3/4	M27x2	112	133	56.5	21	2000	166	96
80	**50/56**	M42x2	56	41/46	145	95	42	G3/4	M27x2	120	155	69.5	24	2000	166	96
100	**63/70**	M48x2	63	50/60	170	125	47	G1	M33x2	134	171	82	27	3000	166	96
125	**80/90**	M64x3	85	65/75	206	150	47	G1	M33x2	153	205	100.5	31	3000	166	96
140	**90/100**	M72x3	90	75/85	226	170	58	G1 1/4	M42x2	166	219	109.5	31	3000	166	96
160	**100/110**	M80x3	95	85/95	265	190	58	G1 1/4	M42x2	185	235	129.5	35	3000	166	96
180	**110/125**	M90x3	105	95/110	292	210	58	G1 1/4	M42x2	194	264	143.5	40	3000	166	96
200	**125/140**	M100x3	112	110/120	306	235	58	G1 1/4	M42x2	220	278	150.5	40	3000	166	96
220 [6]	**140/160**	M125x4	125	120/140	355	273	65	G1 1/2	M48x2 [3]	244	326	174	42	3000	166	96
250	**160/180**	M125x4	125	140/160	395	305	65	G1 1/2	M48x2 [3]	257	326	194	42	3000	166	96
280 [6]	**180/200**	M160x4	160	160/180	445	343	65	G1 1/2	M48x2 [3]	290	375	220.5	48	3000	166	96
320	**200/220**	M160x4	160	180/200	490	394	65	G1 1/2	M48x2 [3]	282	391	243	48	3000	166	96

ØAL	ØMM	ZB max	X* min	XV [14] cent	XV [12] min	XV [12] max	BD	UV [15]	ØTD f8	TL js16	TM h12	r	ØRA	VE
40 [6]	**28**	239	22	143+X*/2	154	140+X*	38	97	25	20	95	0.8	52	29
50	**32/36**	254	32	158+X*/2	174	151+X*	38	111	32	25	112	0.8	63	29
63	**40/45**	299	47	178.5+X*/2	202	167+X*	48	129	40	32	125	1	75	32
80	**50/56**	332.5	58	197.5+X*/2	226.5	180.5+X*	58	163	50	40	150	1	90	36
100	**63/70**	362	79	219.5+X*/2	259	195+X*	78	188	63	50	180	1.2	110	41
125	**80/90**	410	91	255.5+X*/2	301	210+X*	98	234	80	63	224	1.2	132	45
140	**90/100**	440	121	275.5+X*/2	336	215+X*	118	257	90	70	265	1.5	145	45
160	**100/110**	472.5	142	302.5+X*/2	373.5	231.5+X*	128	287	100	80	280	1.5	160	50
180	**110/125**	510	158	326+X*/2	405	247+X*	138	328	110	90	320	1.5	185	55
200	**125/140**	550	204	359+X*/2	461	257+X*	178	343	125	100	335	1.5	200	61
220 [6]	**140/160**	637	200	407+X*/2	507	307+X*	180	393	160	125	385	1.5	235	71
250	**160/180**	650	210	420+X*/2	525	315+X*	180	433	160	125	425	1.5	250	71
280 [6]	**180/200**	752	241	477.5+X*/2	598	357+X*	220	486	200	160	480	2	295	88
320	**200/220**	760	245	477.5+X*/2	600	355+X*	220	536	200	160	530	2	320	88

ØAL = piston Ø
ØMM = piston rod Ø
X* = stroke length
X*max = max. stroke length
X*min = min. stroke length
With hydraulic cylinders with end position cushioning, observe the notice on page 68!

1) Bleeding: With view to the piston rod, the position is offset by 90° in relation to the line connection (clockwise)
2) Ø D4 max. 0.5 mm deep
3) Thread size does not comply with ISO 6022; M50 x 2 available on request
4) Flange connections see separate table pages 42 and 43
5) Throttle valve only with end position cushioning "E" (180° for bleeding)
6) Piston Ø not standardized
10) Observe the min. stroke length "X*min"
11) Double-acting cylinder not standardized
12) When ordering, always specify the "XV" dimension in the clear text. Preferred XV dimension: Observe the trunnion position in the cylinder center XVmin and XVmax
14) XVcent recommendation: Trunnion position in cylinder center
15) The specified dimensions are maximum values, tolerance classes 342 according to ISO 9013 Thermal cutting
16) Line connection "B" and "C"
17) Line connection "M"
18) Trunnion nut with ØAL ≥ 125 mm either at head or at base side depending on the position of the trunnion (XV)

Blocked for new application / Für Neuanwendung gesperrt

Dimensions

Foot mounting CSH2: MS2 (dimensions in mm)

CSH2 MS2

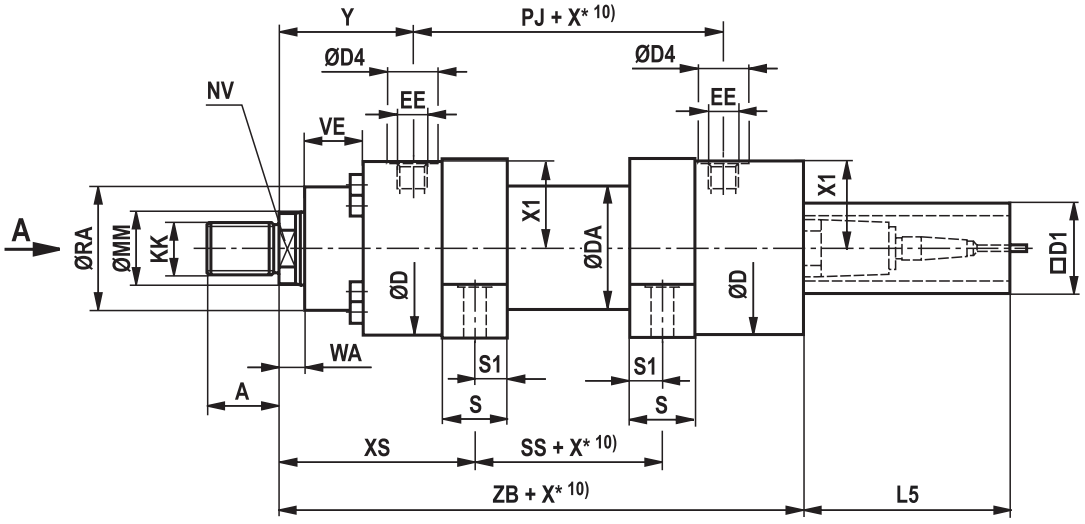

View A

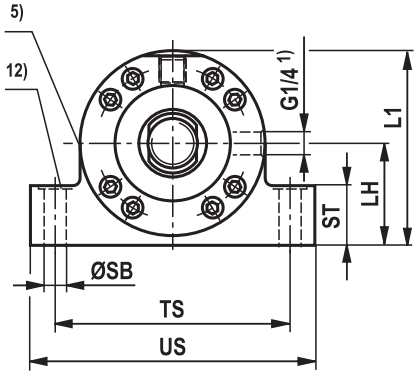

Blocked for new application / Für Neuanwendung gesperrt

Dimensions

Foot mounting CSH2: MS2 (dimensions in mm)

ØAL	ØMM	KK	A	NV	ØD	ØDA	ØD4 [2]	EE [4; 16]	EE [4; 17]	Y	PJ	X1	WA	X* max
40 [6]	**28**	M20x1,5	28	22	88	52	34	G1/2	M22x1,5	83	120	41	18	1000
50	**32/36**	M27x2	36	27/30	102	62	34	G1/2	M22x1,5	98	120	48.5	18	1000
63	**40/45**	M33x2	45	32/36	120	78	42	G3/4	M27x2	112	133	56.5	21	2000
80	**50/56**	M42x2	56	41/46	145	95	42	G3/4	M27x2	120	155	69.5	24	2000
100	**63/70**	M48x2	63	50/60	170	125	47	G1	M33x2	134	171	82	27	3000
125	**80/90**	M64x3	85	65/75	206	150	47	G1	M33x2	153	205	100.5	31	3000
140	**90/100**	M72x3	90	75/85	226	170	58	G1 1/4	M42x2	166	219	109.5	31	3000
160	**100/110**	M80x3	95	85/95	265	190	58	G1 1/4	M42x2	185	235	129.5	35	3000
180	**110/125**	M90x3	105	95/110	292	210	58	G1 1/4	M42x2	194	264	143.5	40	3000
200	**125/140**	M100x3	112	110/120	306	235	58	G1 1/4	M42x2	220	278	150.5	40	3000
220 [6]	**140/160**	M125x4	125	120/140	355	270	65	G1 1/2	M48x2 [3]	244	326	174	42	3000
250	**160/180**	M125x4	125	140/160	395	305	65	G1 1/2	M48x2 [3]	257	326	194	42	3000
280 [6]	**180/200**	M160x4	160	160/180	445	343	65	G1 1/2	M48x2 [3]	290	375	220.5	48	3000
320	**200/220**	M160x4	160	180/200	490	394	65	G1 1/2	M48x2 [3]	282	391	243	48	3000

ØAL	ØMM	L5	D1 max	XS	ZB max	SS	X* [10] min	S	S1	ØSB H13	ST	TS js13	US max	LH	L1	ØRA	VE
40 [6]	**28**	166	80	118	239	50	1	30	15	11	32	110	140	45	93	52	29
50	**32/36**	166	96	135.5	254	45	1	35	17.5	11	37	130	161	55	110	63	29
63	**40/45**	166	96	154	299	49	1	40	20	13.5	42	150	183	65	129	75	32
80	**50/56**	166	96	171.5	332.5	52	2	50	25	17.5	47	180	220	75	149	90	36
100	**63/70**	166	96	189	362	61	3	60	30	22	57	210	260	90	181	110	41
125	**80/90**	166	96	218	410	75	1	70	35	26	67	255	313	105	215	132	45
140	**90/100**	166	96	240.5	440	70	19	85	42.5	30	72	290	359	115	235	145	45
160	**100/110**	166	96	270	472.5	65	44	105	52.5	33	77	330	402	135	277	160	50
180	**110/125**	166	96	291.5	510	69	50	115	57.5	40	92	360	445	150	305	185	55
200	**125/140**	166	96	322.5	550	73	56	125	62.5	40	97	385	471	160	322	200	61
220 [6]	**140/160**	166	96	369.5	637	75	100	155	77.5	45	102	445	541	185	373	235	71
250	**160/180**	166	96	382.5	650	75	100	155	77.5	52	112	500	610	205	414	250	71
280 [6]	**180/200**	166	96	415.5	752	124	51	155	77.5	52	142	550	661	235	469	295	88
320	**200/220**	166	96	435	760	85	125	190	95	62	142	610	732	255	512	320	88

ØAL = piston Ø
ØMM = piston rod Ø
X* = stroke length
X*max = max. stroke length
X*min = min. stroke length
With hydraulic cylinders with end position cushioning, observe the notice on page 68!

[1] Bleeding: With view to the piston rod, the position is offset by 90° in relation to the line connection (clockwise)
[2] Ø D4 max. 0.5 mm deep
[3] Thread size does not comply with ISO 6022; M50 x 2 available on request
[4] Flange connections see separate table pages 42 and 43
[5] Throttle valve only with end position cushioning "E" (180° for bleeding)
[6] Piston Ø not standardized
[10] Observe the min. stroke length "X*min"
[12] Recess 2 mm deep, for hexagon socket head cap screws; ISO 4762 – The screws must not be subjected to shear force. Force introduction via additional external fitting strip
[16] Line connection "B" and "C"
[17] Line connection "M"

Blocked for new application / Für Neuanwendung gesperrt

Dimensions: Flange ports
(dimensions in mm)

CDH2/CSH2

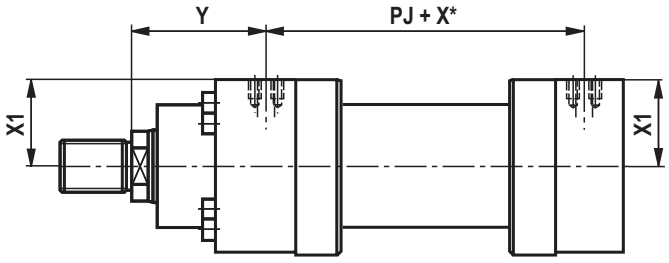

CGH2

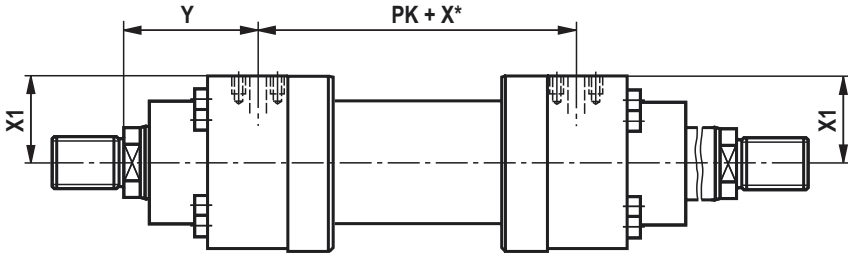

Hole pattern for rectangular flange according to ISO 6162-2 table 2 type 1 and ISO 6162-2 table 2 type 1

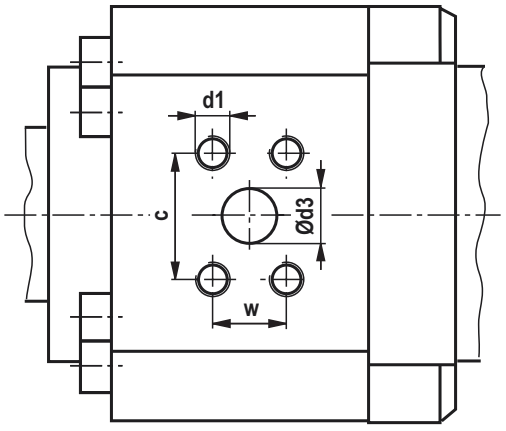

Hole pattern for square flange according to ISO 6164 table 1 and ISO 6164 table 2

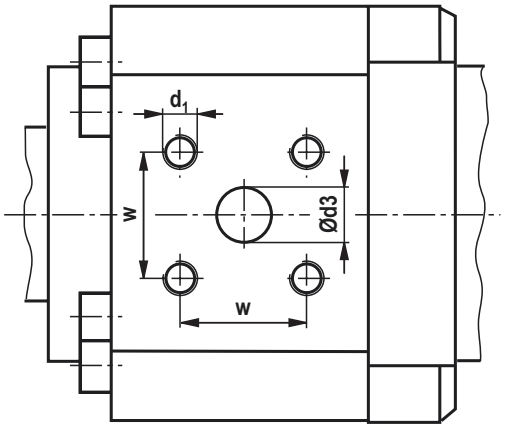

Blocked for new application / Für Neuanwendung gesperrt

Dimensions: Flange ports (dimensions in mm)

ØAL	Version "F" 6) ISO 6162-1 tab.2 type1 (200 - 350 bar) (≙ SAE 3000 PSI)											Version "K" 7) ISO 6164 tab.1 (250 bar)								
	Y	PJ PK	X1	Ød$_3$	Ød$_3$ 4)	c ±0.25	w ±0.25	d$_1$	t$_1$ 1)	t$_1$ 2)	p 3)	Y	PJ PK	X1	Ød$_3$	w ±0.25	d$_1$	t$_1$ 1)	t$_1$ 2)	p 3)
40	–	–	–	–	–	–	–	–	–	–	–	82	122	40.5	10	24.7	M6	12.5	10	250
50	–	–	–	–	–	–	–	–	–	–	–	97	122	48	10	24.7	M6	12.5	12.5	250
63	111	135	55	13	1/2"	38.1	17.5	M8	16	16	350	111	135	57	13	29.7	M8	16	16	250
80	123.5	148	68	13	1/2"	38.1	17.5	M8	16	16	350	123.5	148	69.5	13	29.7	M8	16	16	250
100	133	173	79	19	3/4"	47.6	22.3	M10	20	20	350	133	173	81.5	19	35.4	M8	16	16	250
125	153	205	97.5	25	1"	52.4	26.2	M10	20	20	350	157	197	100	19	35.4	M8	16	16	250
140	162	227	107	32	1 1/4"	58.7	30.2	M10	20	20	250	162	227	109	25	43.8	M10	20	20	250
160	181.5	242	127	32	1 1/4"	58.7	30.2	M10	20	20	250	181.5	242	128.5	25	43.8	M10	20	20	250
180	193	266	139	38	1 1/2"	69.9	35.7	M12	24	24	200	194	264	142	32	51.6	M12	24	24	250
200	219	280	146.5	38	1 1/2"	69.9	35.7	M12	24	24	200	220	278	148.5	32	51.6	M12	24	24	250

ØAL	Version "D" 8) ISO 6162-2 tab.2 type1 (400 bar) (≙ SAE 6000 PSI)											Version "H" 8) ISO 6164 tab.2 (400 bar)								
	Y	PJ PK	X1	Ød$_3$	Ød$_3$ 5)	c ±0.25	w ±0.25	d$_1$	t$_1$ 1)	t$_1$ 2)	p 3)	Y	PJ PK	X1	Ød$_3$	w ±0.25	d$_1$	t$_1$ 1)	t$_1$ 2)	p 3)
40	–	–	–	–	–	–	–	–	–	–	–	82	122	40.5	10	24.7	M6	12.5	10	400
50	–	–	–	–	–	–	–	–	–	–	–	97	122	48	10	24.7	M6	12.5	12.5	400
63	–	–	–	–	–	–	–	–	–	–	–	111	135	57	13	29.7	M8	16	16	400
80	120	155	67	13	1/2"	40.5	18.2	M8	16	14	400	123.5	148	69.5	13	29.7	M8	16	16	400
100	134	171	80.5	13	1/2"	40.5	18.2	M8	16	16	400	133	173	81.5	19	35.4	M8	16	16	400
125	153	205	97	19	3/4"	50.8	23.8	M10	20	20	400	157	197	100	19	35.4	M8	16	16	400
140	162	227	107	25	1"	57.2	27.8	M12	24	24	400	162	227	109	25	43.8	M10	20	20	400
160	181.5	242	127	25	1"	57.2	27.8	M12	24	24	400	181.5	242	128.5	25	43.8	M10	20	20	400
180	194	264	139.5	32	1 1/4"	66.6	31.8	M14	26	26	400	194	264	142	32	51.6	M12	24	24	400
200	220	278	147	32	1 1/4"	66.6	31.8	M14	26	26	400	220	278	148.5	32	51.6	M12	24	24	400
220	244	326	168	38	1 1/2"	79.3	36.5	M16	30	30	400	244	326	171	38	60.1	M16	30	30	400
250	257	326	189	38	1 1/2"	79.3	36.5	M16	30	30	400	257	326	192	38	60.1	M16	30	30	400
280	290	375	215	38	1 1/2"	79.3	36.5	M16	30	30	400	290	375	218	38	60.1	M16	30	30	400
320	282	391	236	51	2"	96.8	44.5	M20	36	36	400	282	391	240	51	69.3	M16	30	30	400

Main dimensions see pages 18 to 41

ØAL = piston Ø

X* = stroke length

1) Thread depth for seal design M, T, G, L, R, S and V

2) Thread depth for seal design A and B

3) Max. operating pressure for related flanges in bar

4) Flange hole pattern according to ISO 6162-1 tab. 2 type 1 corresponds to flange hole pattern according to SAE 6000 PSI

5) Flange hole pattern according to ISO 6162-2 tab.2 type 1 corresponds to flange hole pattern according to SAE 6000 PSI

6) Version "F" with piston Ø 125 - 200 mm not standardized

7) Version "K" with piston Ø 40 - 50 mm and piston -Ø 180 - 200 mm not standardized

8) Versions "D" and "H" not standardized

Blocked for new application / Für Neuanwendung gesperrt

Dimensions: Subplates for valve mounting (SL and SV valve) (dimensions in mm)

Note:
Valves, fittings and piping are **not** included in the scope of delivery!

Notice: Subplates for SL and SV valves (check valves)
Please note:
Seal designs T, G, L, R, S and V are not designed for static hold function!

Installation situation with MT4

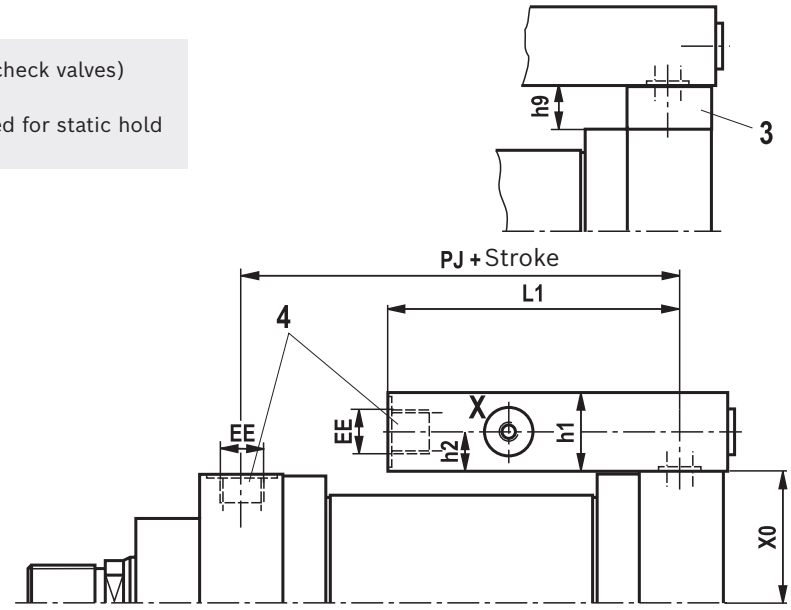

NG6
Hole pattern according to ISO 24340 form A and ISO 4401

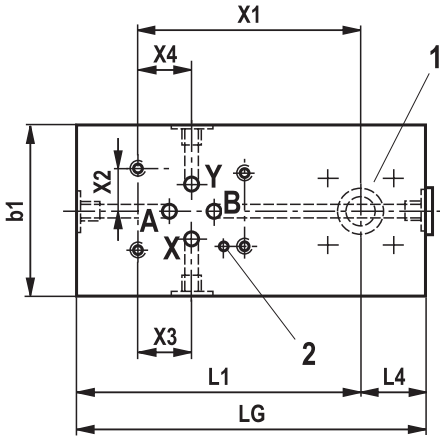

NG10 and 20
Hole pattern according to ISO 5781

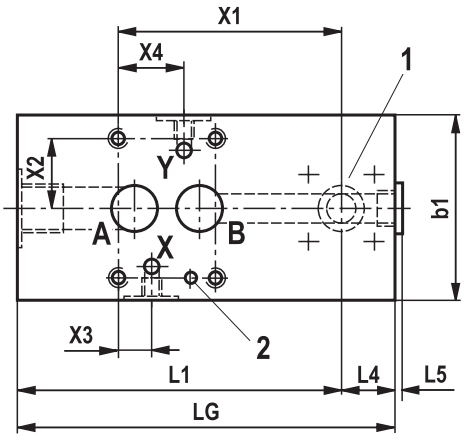

NG30
Hole pattern according to ISO 5781

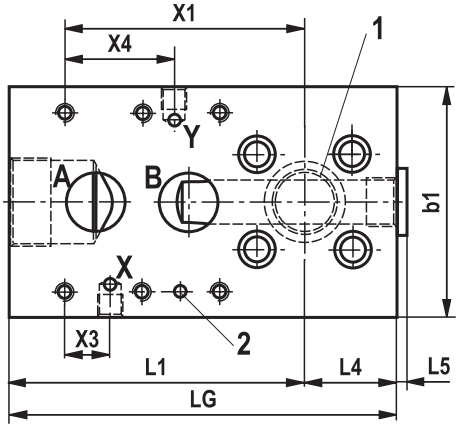

1 Port B to the piston side according to ISO 6164
2 Bore for locking pin
3 Adapter plate for type of mounting MT4 (included in the scope of delivery for MT4)
4 Line connection "B" dimensions "EE" see also pages 18 ... 41

Blocked for new application / Für Neuanwendung gesperrt

Dimensions: Subplates for valve mounting (SL and SV valve)
(dimensions in mm)

ØAL	Valve size (NG)	PJ	EE	Stroke min [1]		X0	Plate dimensions							Port size, hole pattern						Position point valve	
				[2]	[3]		L1	L4	L5	LG	b1	h1	h9	h2	A	X	Y	X3	X4	X1	X2
40	6	121	G1/2	50	50	40.5	90	20	4	110	55	40	10	20	G1/2	G1/4	G1/4	21.5	21.5	65.5	15.5
50	6	121	G1/2	50	50	48.0	90	20	4	110	55	40	10	20	G1/2	G1/4	G1/4	21.5	21.5	65.5	15.5
63	6	134	G3/4	64	64	57.0	100	25	5	125	55	47	20	23.5	G3/4	G1/4	G1/4	21.5	21.5	70.5	15.5
	10	134	G3/4	64	64	57.0	105	25	5	130	85	47	20	23.5	G3/4	G1/4	G1/4	21.4	21.4	73	33.3
80	6	151.5	G3/4	58	58	69.5	100	25	5	125	55	47	20	23.5	G3/4	G1/4	G1/4	21.5	21.5	70.5	15.5
	10	151.5	G3/4	58	58	69.5	105	25	5	130	85	47	20	23.5	G3/4	G1/4	G1/4	21.4	21.4	73	33.3
100	10	172	G1	50	79	81.5	102	28	5	130	85	50	20	25	G1	G1/4	G1/4	21.4	21.4	70	33.3
125	10	201	G1	50	91	100.0	102	28	5	130	85	50	20	25	G1	G1/4	G1/4	21.4	21.4	70	33.3
	20	201	G1	50	91	100.0	137	28	5	165	100	50	20	25	G1	G1/4	G1/4	20.8	39.7	92	39.7
140	10	223	G1 1/4	50	121	109.0	115	35	5	150	85	60	30	30	G1 1/4	G1/4	G1/4	21.4	21.4	80	33.3
	20	223	G1 1/4	50	121	109.0	140	35	5	175	100	60	30	30	G1 1/4	G1/4	G1/4	20.8	39.7	95	39.7
160	10	238.5	G1 1/4	30 [4]	142	128.5	115	35	5	150	85	60	30	30	G1 1/4	G1/4	G1/4	21.4	21.4	80	33.3
	20	238.5	G1 1/4	30 [4]	142	128.5	140	35	5	175	100	60	30	30	G1 1/4	G1/4	G1/4	20.8	39.7	95	39.7
180	10	264	G1 1/4	30 [4]	158	142.0	120	40	5	160	85	60	30	30	G1 1/4	G1/4	G1/4	21.4	21.4	90	33.3
	20	264	G1 1/4	30 [4]	158	142.0	135	50	5	185	100	60	30	30	G1 1/4	G1/4	G1/4	20.8	39.7	105	39.7
	30	264	G1 1/4	30 [4]	158	142.0	160	50	5	210	125	60	30	30	G1 1/4	G1/4	G1/4	24.6	59.6	130	48.4
200	10	278	G1 1/4	20 [4]	204	148.5	120	40	5	160	85	60	30	30	G1 1/4	G1/4	G1/4	21.4	21.4	90	33.3
	20	278	G1 1/4	20 [4]	204	148.5	135	50	5	185	100	60	30	30	G1 1/4	G1/4	G1/4	20.8	39.7	105	39.7
	30	278	G1 1/4	20 [4]	204	148.5	160	50	5	210	125	60	30	30	G1 1/4	G1/4	G1/4	24.6	59.6	130	48.4

ØAL = piston Ø

[1] The information only applies to the following connection situation!

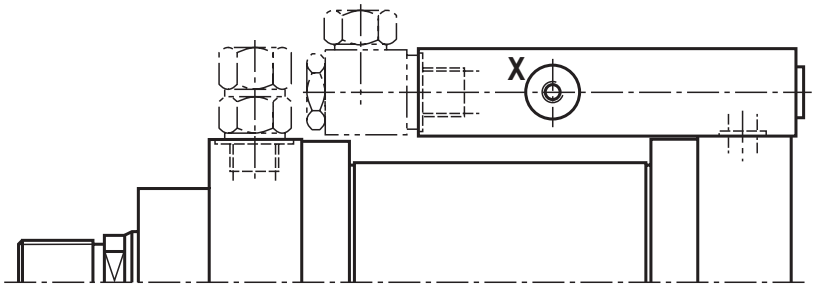

[2] Not for MT4

[3] Only for MT4

[4] With type of mounting "MS2". observe X*min on page 29 and/or 41

Blocked for new application / Für Neuanwendung gesperrt

Dimensions: Subplates for valve mounting (directional and control valves) (dimensions in mm)

1 Port A to the piston side according to ISO 6164
2 Bore for locking pin
3 Adapter plate for type of mounting MT4 (included in the scope of delivery for MT4)
4 Connection "B" dimensions "EE" see also pages 18 to 41

Installation situation with MT4

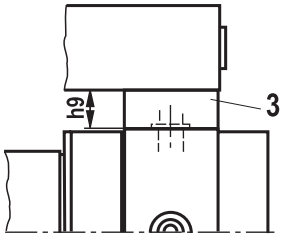

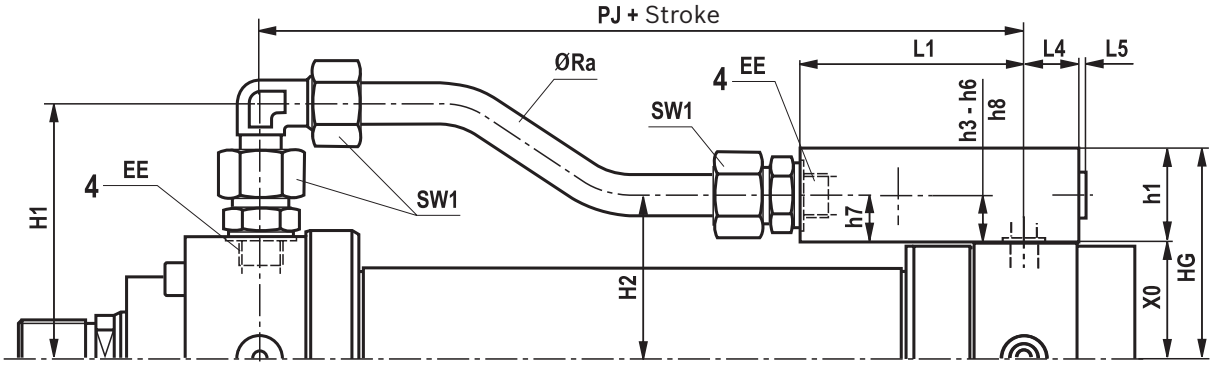

NG6
Hole pattern according to ISO 24340 form A and ISO 4401

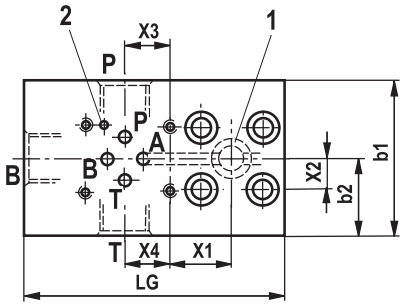

NG10
Hole pattern according to ISO 24340 form A and ISO 4401

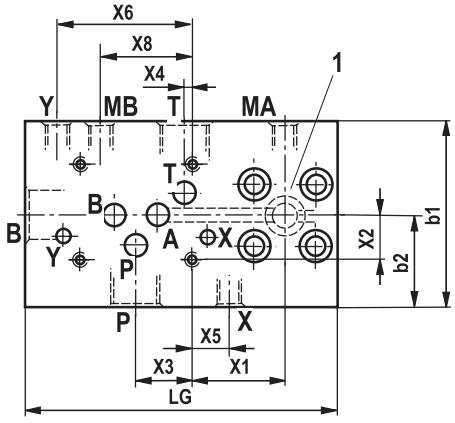

NG16
Hole pattern according to ISO 24340 form A and ISO 4401

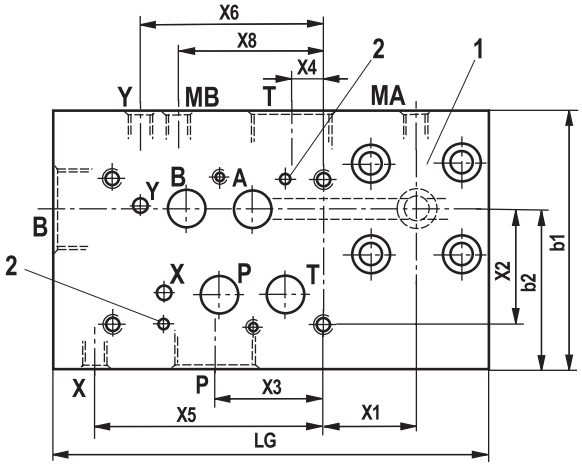

NG25
Hole pattern according to ISO 24340 form A and ISO 4401

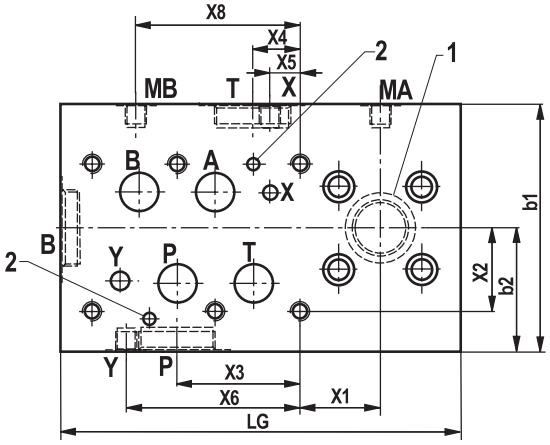

With larger stroke lengths and depending on the piston diameter, the pipeline is mounted at the cylinder pipe using pipe supports. A maximum of two sandwich plates is admissible.

Blocked for new application / Für Neuanwendung gesperrt

Dimensions: Subplates for valve mounting (directional and control valves) (dimensions in mm)

ØAL	Valve size (NG)	PJ	EE	Stroke min	Plate dimensions																
					L1	L4	L5 max	H1	H2 [1]	H2 [2]	SW1	ØRa	b1	h1	LG	HG [1]	HG [2]	b2	X0	h7	h9
40	6	121	G1/2	242	90	20	4	96.0	60.5	70.5	30	16.0x2.5	65	40	110	80.5	90.5	32.5	40.5	20	10
50	6	121	G1/2	242	90	20	4	103.5	68.0	78.0	30	16.0x2.5	65	40	110	88.0	98.0	32.5	48.0	20	10
63	6	134	G3/4	276	100	25	5	121.5	80.5	100.5	36	20.0x3.0	75	47	125	104.0	124.0	37.5	57.0	23.5	20
	10	134	G3/4	301	125	25	5	121.5	80.0	100.0	36	20.0x3.0	90	70	150	127.0	147.0	45	57.0	23	20
80	6	151.5	G3/4	259	100	25	5	134.5	93.0	113.0	36	20.0x3.0	75	47	125	116.5	136.5	37.5	69.5	23.5	20
	10	151.5	G3/4	284	125	25	5	134.5	92.5	112.5	36	20.0x3.0	90	70	150	139.5	159.5	45	69.5	23	20
100	10	172	G1	317	132	28	5	155.0	111.5	131.5	46	25.0x4.0	90	80	160	161.5	181.5	45	81.5	30	20
125	10	201	G1	288	132	28	5	173.5	130.0	150.0	46	25.0x4.0	90	80	160	180.0	200.0	45	100.0	30	20
	16	201	G1	318	162	28	5	173.5	140.0	160.0	46	25.0x4.0	115	90	190	190.0	210.0	57.5	100.0	40	20
140	10	223	G1 1/4	315	135	35	5	188	144.0	174.0	50	30.0x5.0	105	95	170	204.0	234.0	52.5	109.0	35	30
	16	223	G1 1/4	355	175	35	5	188	154.0	184.0	50	30.0x5.0	120	100	210	209.0	239.0	60	109.0	45	30
160	10	238.5	G1 1/4	300	135	35	5	208	163.5	193.5	50	30.0x5.0	105	95	170	223.5	253.5	52.5	128.5	35	30
	16	238.5	G1 1/4	340	175	35	5	208	173.5	203.5	50	30.0x5.0	120	100	210	228.5	258.5	60	128.5	45	30
180	10	264	G1 1/4	289	150	40	5	222	177.0	207.0	50	30.0x5.0	105	95	190	237.0	267.0	52.5	142.0	35	30
	16	264	G1 1/4	319	180	40	5	222	192.0	222.0	50	30.0x5.0	125	105	220	247.0	277.0	62.5	142.0	50	30
	25	264	G1 1/4	339	200	50	0	222	197.0	227.0	50	30.0x5.0	155	110	250	252.0	282.0	77.5	142.0	55	30
200	10	278	G1 1/4	275	150	40	5	229	183.5	213.5	50	30.0x5.0	105	95	190	243.5	273.5	52.5	148.5	35	30
	16	278	G1 1/4	305	180	40	5	229	198.5	228.5	50	30.0x5.0	125	105	220	253.5	283.5	62.5	148.5	50	30
	25	278	G1 1/4	325	200	50	0	229	203.5	233.5	50	30.0x5.0	155	110	250	258.5	288.5	77.5	148.5	55	30

ØAL	Valve size (NG)	Port size, hole pattern																Position point valve	
		P	X3	h3	T	X4	h4	X	X5	h5	Y	X6	h6	MA	MB	X8	h8	X1	X2
40	6	G1/2	21.5	20	G1/2	21.5	20	-	-	-	-	-	-	-	-	-	-	25	15.5
50	6	G1/2	21.5	20	G1/2	21.5	20	-	-	-	-	-	-	-	-	-	-	25	15.5
63	6	G3/4	21.5	23.5	G3/4	21.5	23.5	-	-	-	-	-	-	-	-	-	-	30	15.5
	10	G3/4	27	33	G3/4	3.5	33	G1/4	18	47	G1/4	65.0	47	G1/4	G1/4	60	17	45	21.4
80	6	G3/4	21.5	23.5	G3/4	21.5	23.5	-	-	-	-	-	-	-	-	-	-	30	15.5
	10	G3/4	27	33	G3/4	3.5	33	G1/4	18	47	G1/4	65.0	47	G1/4	G1/4	60	17	45	21.4
100	10	G1	27	30	G1	3.5	40	G1/4	18	57	G1/4	65.0	57	G1/4	G1/4	58	20	52	21.4
125	10	G1	27	30	G1	3.5	40	G1/4	18	57	G1/4	65.0	57	G1/4	G1/4	58	20	52	21.4
	16	G1	50	26	G1	17	25	G1/4	76.5	60	G1/4	88.0	70	G1/4	G1/4	88	35	37	37.5
140	10	G1 1/4	27	35	G1 1/4	3.5	45	G1/4	20	72	G1/4	65.0	72	G1/4	G1/4	55	25	55	21.4
	16	G1 1/4	52	32	G1 1/4	15	32	G1/4	76.5	75	G1/4	88.0	80	G1/4	G1/4	88	40	45	40
160	10	G1 1/4	27	35	G1 1/4	3.5	45	G1/4	20	72	G1/4	65.0	72	G1/4	G1/4	55	25	55	21.4
	16	G1 1/4	52	32	G1 1/4	15	32	G1/4	76.5	75	G1/4	88.0	80	G1/4	G1/4	88	40	45	40
180	10	G1 1/4	27	35	G1 1/4	3.5	45	G1/4	20	72	G1/4	62	72	G1/4	G1/4	55	25	60	21.4
	16	G1 1/4	57	35	G1 1/4	15	34	G1/4	76.5	80	G1/4	86	85	G1/4	G1/4	86	45	50	40
	25	G1 1/4	77	42	G1 1/4	29.4	32	G1/4	17.5	90	G1/4	112.7	90	G1/4	G1/4	110	50	50	52.1
200	10	G1 1/4	27	35	G1 1/4	3.5	45	G1/4	20	72	G1/4	62	72	G1/4	G1/4	55	25	60	21.4
	16	G1 1/4	57	35	G1 1/4	15	34	G1/4	76.5	80	G1/4	86	85	G1/4	G1/4	86	45	50	40
	25	G1 1/4	77	42	G1 1/4	29.4	32	G1/4	17.5	90	G1/4	112.7	90	G1/4	G1/4	110	50	50	52.1

ØAL = piston Ø

[1] Not for MT4

[2] Only for MT4

Blocked for new application / Für Neuanwendung gesperrt

Bleeding / measuring coupling
(dimensions in mm)

By default, a patented safety vent against unintended unscrewing in head and base is delivered for all cylinders.

The port allows for the installation of a measuring coupling with check valve for pressure measurement or contamination-free bleeding. Measuring coupling with check valve function, i.e. the measuring or bleeding hose can also be connected when the system is pressurized.

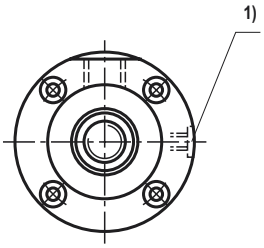

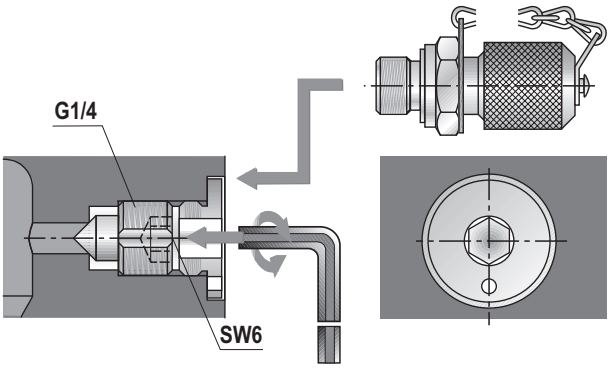

1) Bleeding: With view to the piston rod, the position is offset by 90° in relation to the line connection (clockwise)

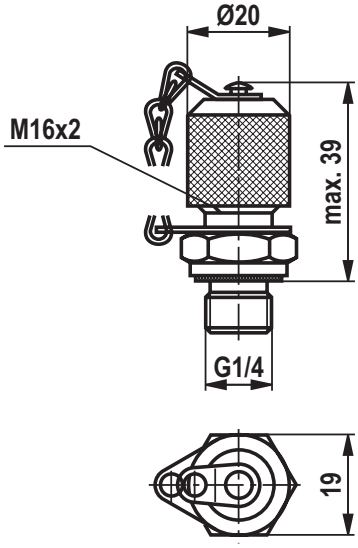

Scope of delivery: Measuring coupling **G1/4**
MEASURING COUPLING AB 20-11/K1 G1/4 with seal ring made of NBR
Material no. **R900009090**
MEASURING COUPLING AB 20-11/K1V G1/4 with seal ring made of FKM
Material no. **R900001264**

Dimensions: Throttle valve
(dimensions in mm)

ØAL	40	50	63	80	100	125	140	160	180	200	220	250	280	320
Protrusion A 1)	1	0	0	0	0	0	0	0	0	0	9.5	0	0	0
Nominal width	4	4	4	5	5	8	8	8	8	8	20	20	20	20

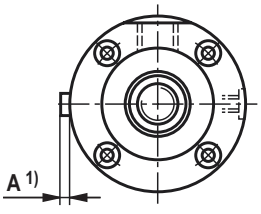

ØAL = piston Ø

1) Throttle valve only with end position cushioning "E" (180° for bleeding) Protrusion A in closed condition

Blocked for new application / Für Neuanwendung gesperrt

Proximity switch
(dimensions in mm)

Inductive proximity switches are used as reliable end position control for hydraulic cylinders. They are an important element for the safe and exact monitoring of safety equipment, lockings and/or other machine functions in their end position by means of the output of signals. The proximity switch which is high-pressure-resistant up to 500 bar works in a contactless manner. Consequently, it is wear-free. The proximity switch has been set at the factory. The switching distance must not be adjusted. The lock nut of the proximity switch is marked at the factory using sealing wax. On versions with proximity switch, the cylinders are provided with proximity switches on both sides.

Technical data
(For applications outside these values, please consult us!)

Electrical			
Function type			PNP normally open contact
Admissible pressure		bar	500
Operating voltage		V DC	10 ... 30
	including residual ripple	%	≤ 15
Voltage drop		V	≤ 15
Rated operating voltage		V DC	24
Rated operating current		mA	200
Idle current		mA	≤ 8
Residual current		µA	≤ 10
Repetition accuracy		%	≤ 5
Hysteresis		%	≤ 15
Ambient temperature range		°C	-25 ... +80
Temperature drift		%	≤ 10
Switching frequency		Hz	1000
Protection class according to DIN EN 60529	▶ Active area		IP68
	▶ Proximity switch		IP67
Housing material			Material no. 1.4104

Pin assignment

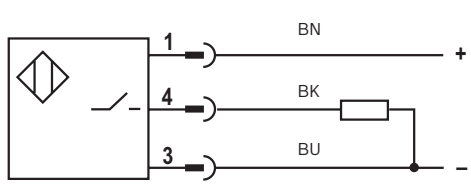



BN brown
BK black
BU blue

Blocked for new application / Für Neuanwendung gesperrt

Dimensions: Proximity switch
(dimensions in mm)

CDH2

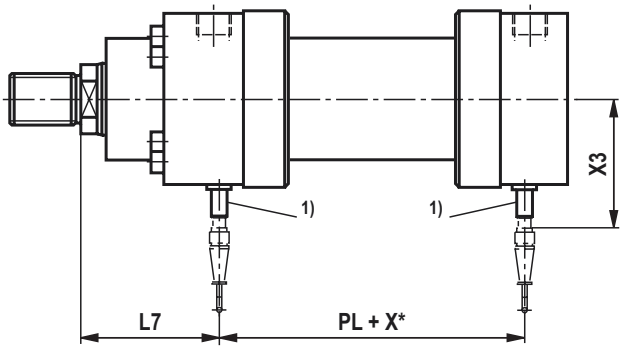

CGH2

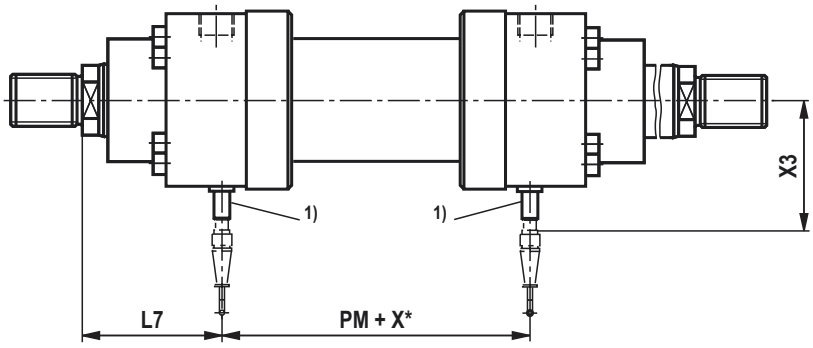

Installation space for mating connector

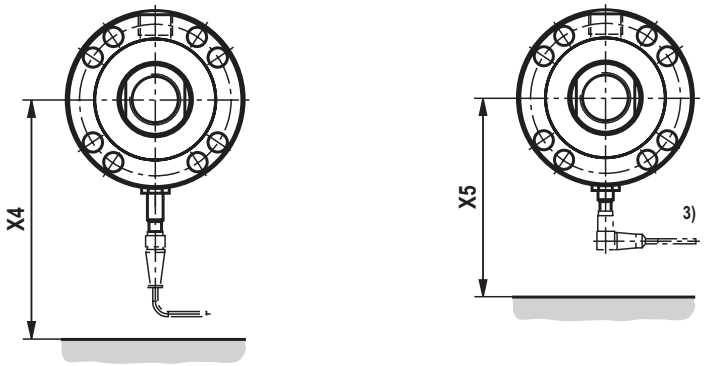

Mating connector with 5 m cable
Material no. **R913016852**
(mating connector is **not** included in the scope of delivery, must be ordered separately)



Mating connector, angled with 5 m cable (position of the cable outlet cannot be defined)
Material no. **R988064311**
(mating connector is **not** included in the scope of delivery, must be ordered separately)

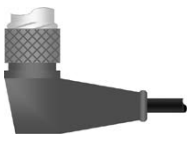

Blocked for new application / Für Neuanwendung gesperrt

Dimensions: Proximity switch
(dimensions in mm)

ØAL	ØMM	PL	PM	L7	X3	X4	X5
40	**25** **28**	112	112	87	94	170	125
50	**32** **36**	110	110	103	98	175	130
63	**40** **45**	125	125	116	103	180	135
80	**50** **56**	138	138	128.5	108	185	140
100	**63** **70**	161	161	139	116	195	150
125	**80** **90**	189	189	161	126	205	160
140	**90** **100**	209	209	171	146	225	180
160	**100** **110**	228	228	188.5	151	230	185
180	**110** **125**	254	254	199	159	235	190
200	**125** **140**	264	264	227	166	245	200
220	**140** **160**	310	310	252	177 [2]	255	– [3]
250	**160** **180**	310	310	265	187 [2]	265	– [3]
280	**180** **200**	369	369	293	199 [2]	275	– [3]
320	**200** **220**	375	375	290	209 [2]	285	– [3]

Main dimensions see page 18 to 29

ØAL = piston Ø
ØMM = piston rod Ø
X* = stroke length

1) The proximity switch is always located opposite of the line connection
2) Piston Ø 220 - 320 mm
Proximity switch not protruding
3) Piston Ø 220 - 320 mm
Angled mating connector not possible

Blocked for new application / Für Neuanwendung gesperrt

Position measurement system

The magnetostrictive position measurement system that is pressure-resistant and works contactless and absolute.

Operating conditions	
Protection class	IP67 (connector professionally mounted) IP68 at cable outlet
EMC test	Electro-magnetic interference emission according to EN 61000-6-3 Electro-magnetic interference resistance according to EN 61000-6-2 The sensor complies with EC directives and bears the CE marking

Technical data: Analog output
(For applications outside these values, please consult us!)

Analog "F" / "C"			
Electrical connection	Type of connection		1 x M16 connector (6-pole)
	Power consumption	W	<3.25
Operating conditions	Operating temperature	°C	-40 ... +85
Tightening torque M_A	≤ 1500 mm measurement length	Nm	50 ±4%
	> 1500 mm measurement length	Nm	65 ±4%
Wrench size SW		mm	46
Voltage "F"		V	0 ... 10
	Input resistance control system	kΩ	>5
	Resolution		16 bit (internal resolution 0.1 µm)
Current "C"		mA	4 ... 20
	Load	Ω	min/max: 0/500
	Resolution		16 bit (internal resolution 0.1 µm)

Connector
(View to pin side)

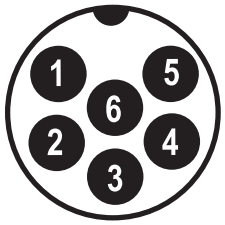

Pin	Cable	Function
1	gray	Position 1 (solenoid)
2	pink	DC ground
3	yellow	not used
4	green	DC ground
5	brown	+12 ... 30 VDC ±20% (9.6 ... 36 VDC)
6	white	DC ground (0 V)

Blocked for new application / Für Neuanwendung gesperrt

Technical data: Digital output
(For applications outside these values, please consult us!)

Digital "D" / "S"			
Electrical connection	Type of connection		1 x M16 connector (7-pole)
	Power consumption	W	1.2 typical
Operating conditions	Operating temperature	°C	-40 ... +85
Tightening torque M_A	≤ 1500 mm measurement length	Nm	50 ±4%
	> 1500 mm measurement length	Nm	65 ±4%
Wrench size SW		mm	46
SSI "D"	Interface		SSI 24 bit (RS-485/RS-422)
	Resolution	µm	5
	Direction of measurement		asynchronious forward
	Data format		Gray
SSI "S"	Interface		SSI 24 bit (RS-485/RS-422)
	Resolution	µm	1
	Direction of measurement		synchronious forward
	Data format		Gray

Connector
(View to pin side)

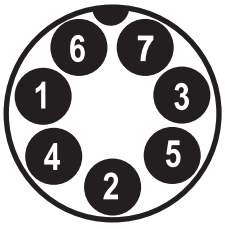

Pin	Cable	Function
1	gray	Data (-)
2	pink	Data (+)
3	yellow	Clock (+)
4	green	Clock (-)
5	brown	+12 ... 30 VDC ±20% (9.6 ... 36 VDC)
6	white	DC ground (0 V)
7	-	not used

Types of mounting

MP3, MP5

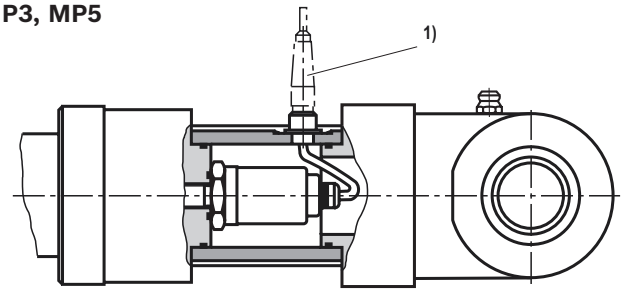

1) For analog output:
6-pole amphenol mating connector, material no. R900072231
(mating connector is **not** included in the scope of delivery, must be ordered separately)

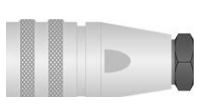

MF3, MF4, MT4, MS2

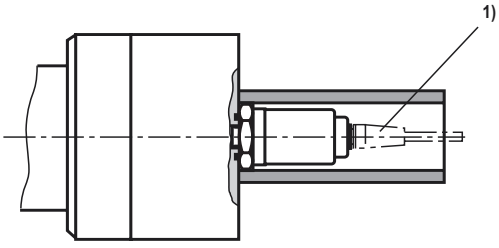

1) For digital output:
7-pole amphenol mating connector, material no. R900079551
(mating connector is **not** included in the scope of delivery, must be ordered separately)

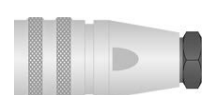

Blocked for new application / Für Neuanwendung gesperrt

Technical data: Profibus
(For applications outside these values, please consult us!)

Profibus "N" / "P"			Profibus 63 / Profibus 53
Electrical connection	Type of connection		2 x M16 connector (6-pole), alternatively 2 x M12 connector (5-pole) and 1 x M8 connector (4-pole)
	Current consumption	mA	90, typical
Operating conditions	Operating temperature	°C	-40 ... +75
Tightening torque M_A		Nm	65 ±4%
Wrench size SW		mm	46
Output	Interface		IEC 61158 CPF3 PROFIBUS
	Data record		PROFIBUS-DP slave
	Transmission rate	MBit/s	max. 12
Measurement accuracy	Travel resolution	µm	1 ... 1000 selectable as parameter
	Velocity		With 5 µm travel resolution: 0.64 mm/s to 500 mm; 0.43 mm/s to 2000 mm; 0.21 mm/s to 4500 mm; 0.14 mm/s to 7600 mm measurement length With 2 µm travel resolution: 2.5 times smaller values
	Linearity		< ± 0.01% Full Scale (Minimum +/– 50 µm)
	Repeatability		< ± 0.001% Full Scale (Minimum +/– 2.5 µm)
	Temperature coefficient	ppm/°C	< 15
	Hysteresis	µm	< 4

Pin assignment for Profibus

Pin assignment for Profibus D63

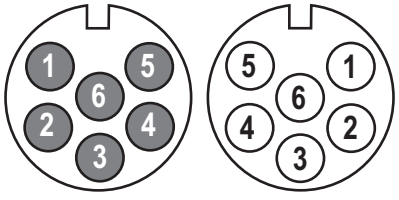

Pins Sockets

Pin	Cable	Function
1	green	RxD/TxD-N (bus)
2	red	RxD/TxD-P (bus)
3	––	DGND (terminating resistor) *
4	––	VP (terminating resistor) *
5	black	+24 V DC (–15 / +20%)
6	blue	DC ground (0 V)
––	yellow/ green	Shield compensating line, is usually not to be connected

* only with sockets

Pin assignment for Profibus D53

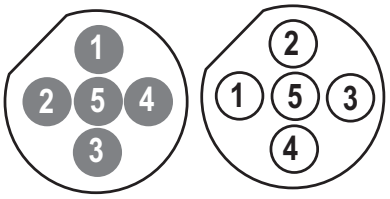

Pins Sockets

Pin	Cable	Function
1	––	VP+5 (terminating resistor) *
2	green	RxD/TxD-N (bus)
3	––	DGND (terminating resistor) *
4	red	RxD/TxD-P (bus)
5	Shield	Shield

* only with sockets

Supply

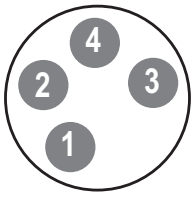

View connector side

Pin	Cable	Function
1	brown	+24 V DC (–15 / +20%)
2	white	not used
3	blue	DC ground (0 V)
4	black	not used

Blocked for new application / Für Neuanwendung gesperrt

Types of mounting

MP3, MP5

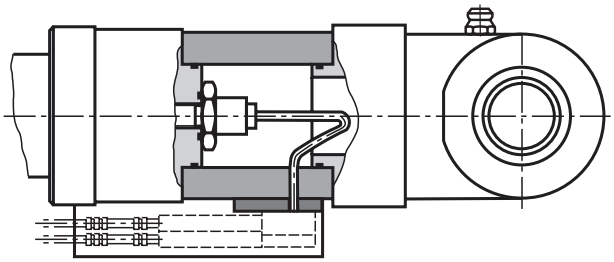

MF3, MF4, MT4, MS2

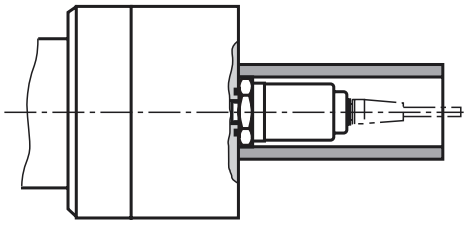

The output of the position measurement system is by default always rotated by 180° to the selected position of the hydraulic connection in the cylinder base.

Mating connectors for D63



Signal input
6-pole mating connector M16
Material no. R900705950 (socket)

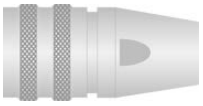

Signal output
6-pole end plug M16
Material no. R900722518 (pins)

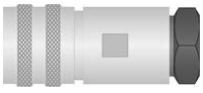

Signal output
6-pole mating connector M16
Material no. R900705951 (pins)

Mating connectors for D53



Signal input
5-pole mating connector M12-B
Material no. R900773386 (socket)

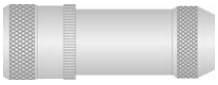

4-pole mating connector M8
Material no. R901132799

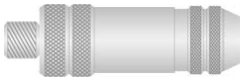

Signal output
5-pole mating connector M12-B
Material no. R901091655 (pins)



Connection cable 5 m
with 4-pole mating connector M8
Material no. R901213191

Connection cable 10 m
with 4-pole mating connector M8
Material no. R913008737

Connection cable 15 m
with 4-pole mating connector M8
Material no. R913008738



Signal output
5-pole end plug M12-B
Material no. R901070126 (pins)

Mating connector is **not** included in the scope of delivery, must be ordered separately.

Blocked for new application / Für Neuanwendung gesperrt

Technical data: IO-Link
(For applications outside these values, please consult us!)

IO-Link "L"			IO-Link V1.1
Electrical connection	Type of connection		1 x M12 connector (4-pole)
	Operating voltage	VDC	+24 (± 25%) / residual ripple ≤ 0.28 Vpp
	Current consumption	mA	< 50
Operating conditions	Operating temperature	°C	-40 ... +75
Tightening torque M_A		Nm	50 ±4%
Wrench size SW		mm	34
Output	Interface		Digital
	Transmission record		IO-Link V1.1
	Data format	Bit	32 signed (position in µm)
	Data transmission rate		COM3 (230.4 kBaud)
	Process data Device - Master	Bytes	4
	Process data Master - Device	Bytes	0
	Measured variable	MBit/s	Position
Measured values	Resolution [1]	µm	5; 10; 20; 50 or 100
	Cycle time:	ms	Minimum 1 (depending on master)
	Linearity [2]	%	≤ ±0.02 F.S. (Minimum ±60 µm)
	Measurement repetition accuracy	%	≤ ±0.005 F.S. (Minimum ±20 µm)

[1] Selectable via IO-Link Master.
[2] Tested with position magnet 251 416-2.

M12 connector (A-coded)
View to sensor

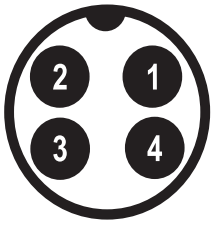

Pin	Function
1	+ 24 VDC (± 25%)
2	DI / DQ
3	DC ground (0 V)
4	C / Q

Mating connectors



M12 A-coded (5-pole), straight
Material number: R913045873

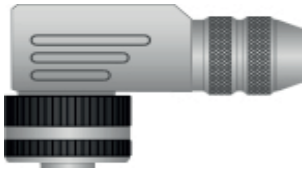

M12 A-coded (5-pole), angled
Material number: R901500328

Mating connector is **not** included in the scope of delivery, must be ordered separately.

Blocked for new application / Für Neuanwendung gesperrt

Technical data: Profinet
(For applications outside these values, please consult us!)

Profinet "R"			**Profinet RT / Profinet IRT version 2.3**				
Electrical connection	Type of connection		2 x M12 device socket (5-pole) 1 x M12 connector (4-pole)				
	Operating voltage	VDC	+12 ... 30 (± 20%) (9.6 ... 36)				
	Power consumption	W	< 4 typical				
Operating conditions	Operating temperature	°C	-40 ... +85				
Tightening torque M_A		Nm	65 ±4%				
Wrench size SW		mm	46				
Output	Interface		Profinet RT				
			Profinet IRT version 2.3				
	Data record		MTS profile and encoder profile 4.1				
	Data transmission rate	MBit/s	max. 100				
Measured values	Resolution	µm	0,5 ... 100 (selectable)				
	Cycle time [1] Measurement length	mm	≤ 50	≤ 715	≤ 2000	≤ 4675	≤ 7620
	Cycle time:	µs	250	500	1000	2000	4000
	Linearity deviation [2] Measurement length	mm	≤ 500		> 500		
	linearity deviation	µm	≤ ± 50		< 0.01% F.S		
	Measurement repetition accuracy	%	≤ ±0.001 F.S. (Minimum ±2.5 µm) typical				
	Hysteresis	µm	< 4 typical				
	Temperature coefficient	ppm/K	< 15 typical				

1) Sensor with standard settings
2) Tested with position magnet 251 416-2.

M12 device socket (D-coded)
Port 1 and 2 - signal
(View to sensor)

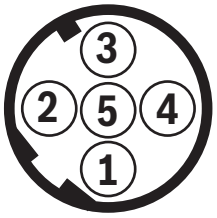

Pin	Function
1	Tx (+)
2	Rx (+)
3	Tx (−)
4	Rx (−)
5	Not used

M12 connector (A-coded)

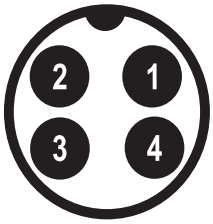

Pin	Function
1	+12...30 VDC (±20%)
2	Not used
3	DC ground (0 V)
4	Not used

Blocked for new application / Für Neuanwendung gesperrt

Technical data: Profinet

Types of mounting

MP3, MP5

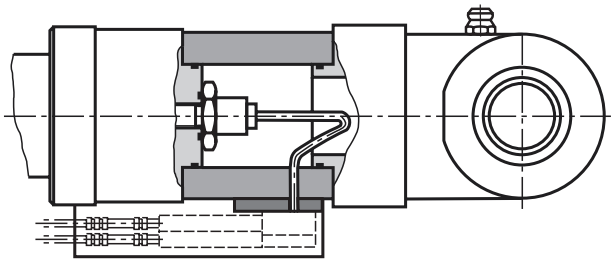

MF3, MF4, MT4, MS2

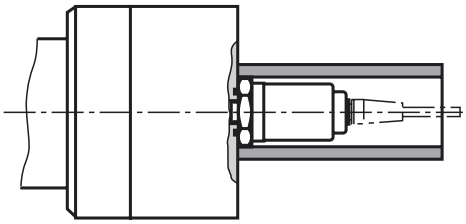

The output of the position measurement system is by default always rotated by 180° to the selected position of the hydraulic connection in the cylinder base.

Mating connectors



M12 D-coded (4-pole), straight

Material number: R913045872
(required 2 x)



M12 A-coded (5-pole), straight

Material number: R913045873

Mating connector is **not** included in the scope of delivery, must be ordered separately.

Blocked for new application / Für Neuanwendung gesperrt

Fork clevis CCKB (clampable)
(dimensions in mm)

ISO 8132

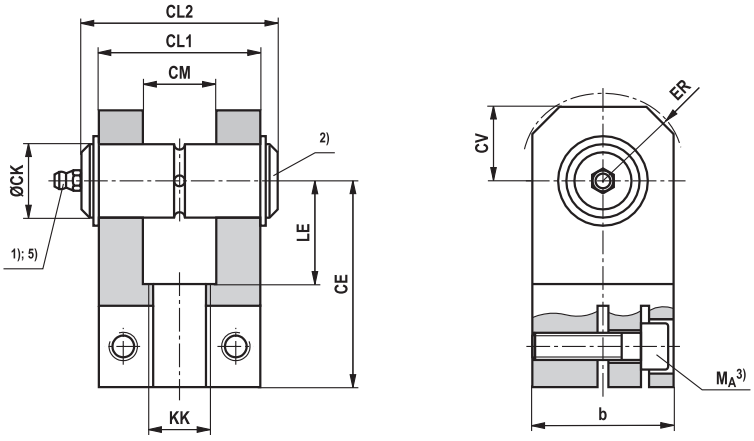

ØAL	ØMM	Type	Material no.	Nominal force kN	b max	CE js13	ØCK H9 2)	CL1 h16	CL2 max	CM A13	ER max
40	**25/28**	**CCKB 25**	R900542845	32	50	65	25	56	84	25	32
50	**32/36**	**CCKB 32**	R900542846	50	65	80	32	70	105	32	40
63	**40/45**	**CCKB 40**	R900542847	80	80	97	40	90	133	40	50
80	**50/56**	**CCKB 50**	R900542848	125	100	120	50	110	165	50	63
100	**63/70**	**CCKB 63**	R900542849	200	140	140	63	140	185	63	71
125	**80/90**	**CCKB 80**	R900542850	320	180	180	80	170	225	80	90
140	**90/100**	**CCKB 90**	6)	400	200	195	90	190	6)	90	100
160	**100/110**	**CCKB 100**	6)	500	220	210	100	210	6)	100	110

ØAL	ØMM	Type	KK 6H	LE min	CV max	Clamping screw ISO 4762-10.9	M_A 3) Nm	*m* 4) kg
40	**25/28**	**CCKB 25**	M20x1,5	34	32	M10x35	49	1.4
50	**32/36**	**CCKB 32**	M27x2	41	40	M12x40	85	2.8
63	**40/45**	**CCKB 40**	M33x2	51	50	M16x50	210	5.2
80	**50/56**	**CCKB 50**	M42x2	63	63	M20x60	425	9.5
100	**63/70**	**CCKB 63**	M48x2	75	71	M24x80	730	21.5
125	**80/90**	**CCKB 80**	M64x3	94	90	M30x100	1450	38.2
140	**90/100**	**CCKB 90**	M72x3	108	100	M36x120	2480	6)
160	**100/110**	**CCKB 100**	M80x3	114	110	M36x130	2480	6)

Geometry and dimensions may differ depending on the manufacturer.
In case of combination with other mounting elements, the usability must be checked.

The fork clevis must always be screwed against the shoulder of the piston rod and secured against loosening!

ØAL = piston Ø
ØMM = piston rod Ø
1) Grease nipple, cone head form A according to DIN 71412
2) Related bolt Ø m6
(bolt and bolt lock are included in the scope of delivery and not mounted upon delivery)
3) M_A = tightening torque4)
4) *m* = weight of the fork clevis in kg
5) Without lubrication bore
6) On request

Blocked for new application / Für Neuanwendung gesperrt

Swivel head CGKD (clampable)
(dimensions in mm)

ISO 8132

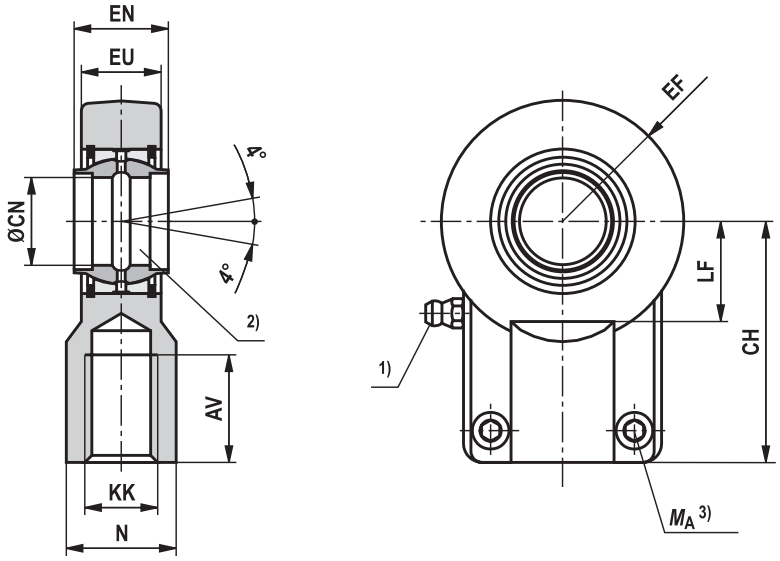

ØAL	ØMM	Type	Material no.	Nominal force kN	AV min	N max	CH js13	EF max	ØCN H7 2)	EN h12	EU max
40	**25/28**	**CGKD 25**	R900323332	32	29	31	65	32	25	25	22
50	**32/36**	**CGKD 32**	R900322049	50	37	38	80	40	32	32	28
63	**40/45**	**CGKD 40**	R900322029	80	46	47	97	50	40	40	34
80	**50/56**	**CGKD 50**	R900322719	125	57	58	120	63	50	50	42
100	**63/70**	**CGKD 63**	R900322028	200	64	70	140	72.5	63	63	53.5
125	**80/90**	**CGKD 80**	R900322700	320	86	91	180	92	80	80	68
140	**90/100**	**CGKD 90** 7)	R900325702	400	91	100	195	101	90	90	72
160	**100/110**	**CGKD 100**	R900322030	500	96	110	210	114	100	100	85.5
180	**110/125**	**CGKD 110** 7)	R900308153	635	106	125	235	129	110	110	88
200	**125/140**	**CGKD 125**	R900322026	800	113	135	260	160	125	125	105
220	**140/160**	**CGKD 160**	R900300718	1,520	126	165	310	200	160	160	133
250	**160/180**	**CGKD 160**	R900300718	1,520	126	165	310	200	160	160	133
280	**180/200**	**CGKD 200**	R900324814	2,000	161	215	390	250	200	200	165
320	**200/220**	**CGKD 200**	R900324814	2,000	161	215	390	250	200	200	165

Blocked for new application / Für Neuanwendung gesperrt

Swivel head CGKD (clampable)
(dimensions in mm)

ØAL	ØMM	Type	KK 6H	LF min	Clamping screw ISO 4762-10.9	M_A 3) Nm	m 4) kg	C_0 5) kN	F_{adm} 6) kN
40	**25/28**	**CGKD 25**	M20x1,5	25.5	M8x20	30	0.65	78	28.8
50	**32/36**	**CGKD 32**	M27x2	30	M10x25	59	1.15	114	42.1
63	**40/45**	**CGKD 40**	M33x2	39	M10x30	59	2.1	204	75.3
80	**50/56**	**CGKD 50**	M42x2	47	M12x35	100	4	310	114.4
100	**63/70**	**CGKD 63**	M48x2	58	M16x40	250	7.2	430	158.7
125	**80/90**	**CGKD 80**	M64x3	74	M20x50	490	15	695	256.5
140	**90/100**	**CGKD 90** 7)	M72x3	85	M20x60	490	19	750	276.8
160	**100/110**	**CGKD 100**	M80x3	94	M24x60	840	25.5	1060	391.1
180	**110/125**	**CGKD 110** 7)	M90x3	105	M24x60	840	36.5	1200	442.8
200	**125/140**	**CGKD 125**	M100x3	116	M24x70	840	52.5	1430	527.7
220	**140/160**	**CGKD 160**	M125x4	145	M24x80	840	82.5	2200	811.8
250	**160/180**	**CGKD 160**	M125x4	145	M24x80	840	82.5	2200	811.8
280	**180/200**	**CGKD 200**	M160x4	190	M30x100	1700	168	3650	1346.9
320	**200/220**	**CGKD 200**	M160x4	190	M30x100	1700	168	3650	1346.9

The specified dimensions are maximum values and may differ depending on the manufacturer.
In case of combination with other mounting elements, the usability must be checked.

The swivel head must always be screwed against the shoulder of the piston rod. Afterwards, the clamping screws must be tightened with the specified tightening torque.

ØAL = piston Ø
ØMM = piston rod Ø
1) Grease nipple, cone head form A according to DIN 71412
2) Related bolt Ø m6
3) M_A = tightening torque
4) m = weight of swivel head in kg
5) C_0 = static load rating of the swivel head
6) F_{adm} = max. admissible load of the swivel head with oscillatory or alternating loads
7) Not contained in the standard

Blocked for new application / Für Neuanwendung gesperrt

Trunnion bearing block CLTB
(dimensions in mm)

ISO 8132

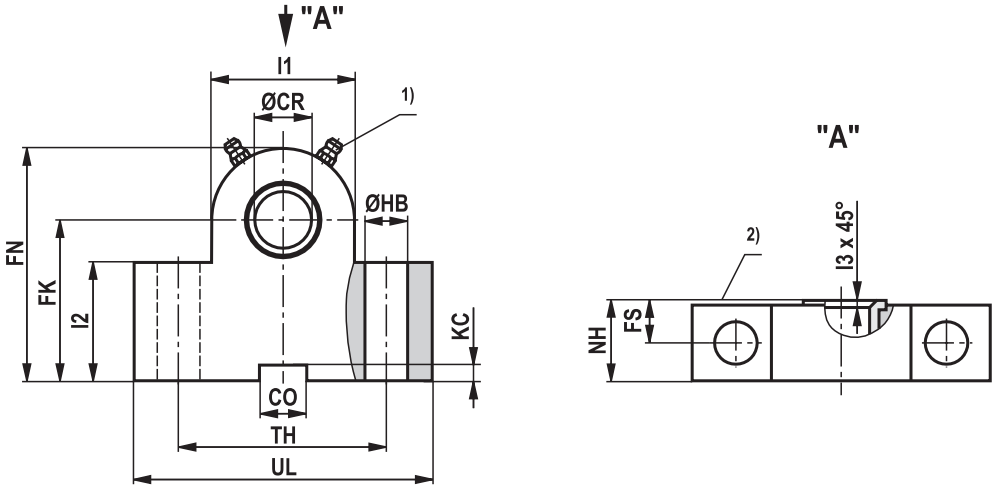

ØAL	Type [3]	Material no.	Nominal force kN [4]	ØCR H7	CO N9	FK JS12	FN max.	FS js13	ØHB H13	KC +0.3
40	**CLTB 25**	R900772610	32	25	25	55	80	12	13.5	5.4
50	**CLTB 32**	R900772611	50	32	25	65	100	15	17.5	5.4
63	**CLTB 40**	R900772612	80	40	36	76	120	16	22	8.4
80	**CLTB 50**	R900772613	125	50	36	95	140	20	26	8.4
100	**CLTB 63**	R900772614	200	63	50	112	180	25	33	11.4
125	**CLTB 80**	R900772615	320	80	50	140	220	31	39	11.4
140	**CLTB 90**	R901364220	385	90	63	160	250	40	45	12.4
160	**CLTB 100**	R901205929	500	100	63	180	280	45	52	12.4
180	**CLTB 110**	R901364223	630	110	80	200	310	50	52	15.4
200	**CLTB 125**	R901363022	785	125	80	220	345	56	45	15.4

ØAL	Type [3]	l1	l2	l3	NH max.	TH js13	UL max.	*m* [5] kg
40	**CLTB 25**	56	45	1.5	26	80	110	2.1
50	**CLTB 32**	70	52	2	33	110	150	4.55
63	**CLTB 40**	88	60	2.5	41	125	170	7.3
80	**CLTB 50**	100	75	2.5	51	160	210	14.5
100	**CLTB 63**	130	85	3	61	200	265	23.1
125	**CLTB 80**	160	112	3.5	81	250	325	52.3
140	**CLTB 90**	180	130	4	91	265	345	[6]
160	**CLTB 100**	200	145	4.5	102	295	385	100
180	**CLTB 110**	220	160	5	112	320	410	[6]
200	**CLTB 125**	[6]	[6]	[6]	132	385	570	[6]

Note:
Geometry and dimensions may differ depending on the manufacturer.
All graphical pictures are examples.
In case of combination with other mounting elements, the usability must be checked.
The trunnion bearing blocks are suitable for attachment in case of type of mounting MT4.

ØAL = piston Ø
1) Grease nipple, cone head form A according to DIN 71412
2) Trunnion contact surface (inside)
3) Bearing blocks are always supplied in pairs
4) Nominal force applies to applications in pairs
5) ***m*** = weight of trunnion bearing block in kg (indication per pair)
6) On request

Blocked for new application / Für Neuanwendung gesperrt

Clevis bracket CLCA (clampable)
(dimensions in mm)

ISO 8132, form B

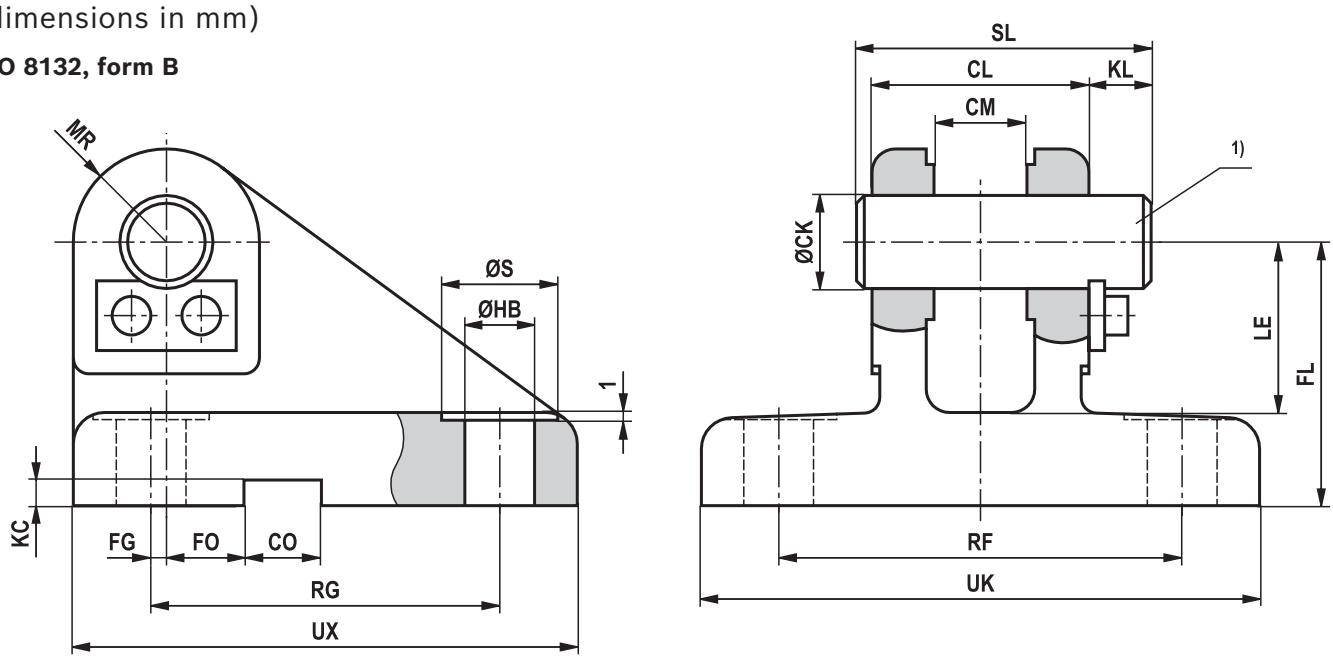

ØAL	ØMM	Type	Material no.	Nominal force kN	ØCK H9 1)	CL h16	CM A13	CO N9	FG JS14	FL js13	FO JS14
40	**25/28**	**CLCA 25**	R900542864	32	25	56	25	25	10	55	10
50	**32/36**	**CLCA 32**	R900542865	50	32	70	32	25	14.5	65	6
63	**40/45**	**CLCA 40**	R900542866	80	40	90	40	36	17.5	76	6
80	**50/56**	**CLCA 50**	R900542867	125	50	110	50	36	25	95	0
100	**63/70**	**CLCA 63**	R900542868	200	63	140	63	50	33	112	0
125	**80/90**	**CLCA 80**	R900542869	320	80	170	80	50	45	140	0
140	**90/100**	**CLCA 90**	R901373007	400	90	190	90	63	47.5	160	0
160	**100/110**	**CLCA 100**	R901261098	500	100	210	100	63	52.5	180	0
180	**110/125**	**CLCA 110**	R901373008	635	110	240	110	80	62.5	200	0
200	**125/140**	**CLCA 125**	R901373011	800	125	270	125	80	75	230	0

ØAL	ØMM	Type	ØHB H13	KC +0.3	KL	LE min	MR max	RF js13	RG js13	ØS	SL	UK max	UX max	*m* 2) kg
40	**25/28**	**CLCA 25**	13.5	5.4	10	37	25	90	85	20	69	120	115	3
50	**32/36**	**CLCA 32**	17.5	5.4	13	43	32	110	110	26	87	145	145	5
63	**40/45**	**CLCA 40**	22	8.4	16	52	40	140	125	33	110	185	170	9.6
80	**50/56**	**CLCA 50**	26	8.4	19	65	50	165	150	40	133	215	200	15.5
100	**63/70**	**CLCA 63**	33	11.4	20	75	63	210	170	48	164	270	230	27.5
125	**80/90**	**CLCA 80**	39	11.4	26	95	80	250	210	57	202	320	280	47
140	**90/100**	**CLCA 90**	45	12.4	28	108	90	280	235	66	224	360	320	3)
160	**100/110**	**CLCA 100**	52	12.4	30	120	100	315	250	76	246	405	345	3)
180	**110/125**	**CLCA 110**	52	15.4	31	138	110	335	305	76	277	425	400	3)
200	**125/140**	**CLCA 125**	52	15.4	32	170	125	365	350	76	310	455	450	3)

Note:

Geometry and dimensions may differ depending on the manufacturer.

In case of combination with other mounting elements, the usability must be checked.

ØAL = piston Ø

ØMM = piston rod Ø

1) Bolt Ø m6 required (bolt and bolt lock are included in the scope of delivery and are not mounted upon delivery)

2) ***m*** = weight of clevis bracket in kg

3) On request

Blocked for new application / Für Neuanwendung gesperrt

Clevis bracket CLCD (clampable)
(dimensions in mm)

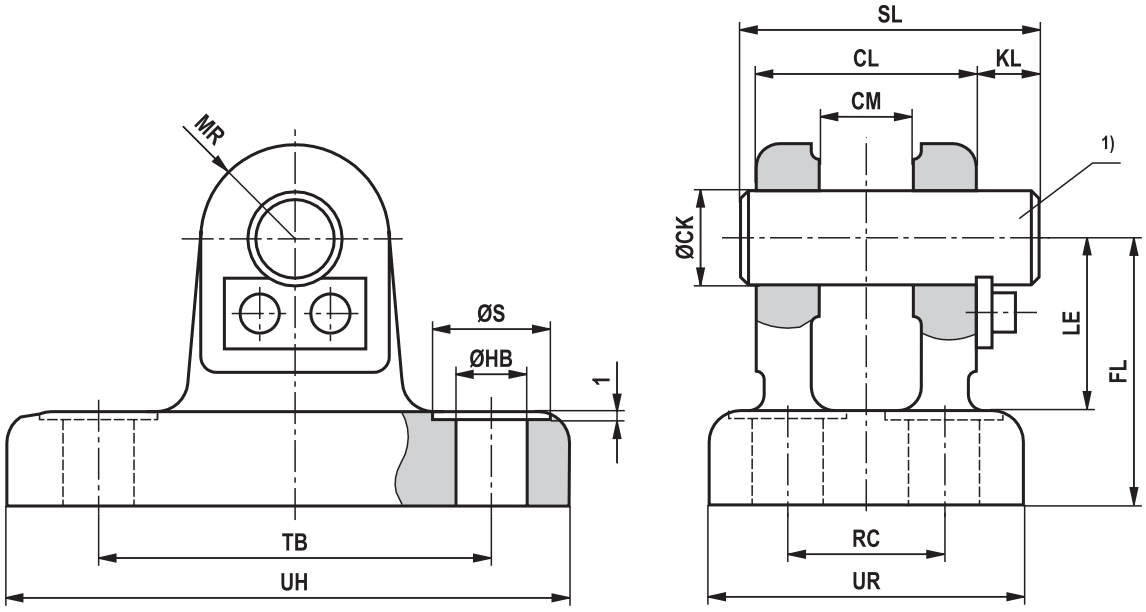

ØAL	ØMM	Type	Material no.	Nominal force kN	ØCK H9 [1]	CL h16	CM A13	FL JS12	ØHB H13	KL
40	**25/28**	**CLCD 25**	R900542882	32	25	56	25	55	13.5	10
50	**32/36**	**CLCD 32**	R900542883	50	32	70	32	65	17.5	13
63	**40/45**	**CLCD 40**	R900542884	80	40	90	40	76	22	16
80	**50/56**	**CLCD 50**	R900542885	125	50	110	50	95	26	19
100	**63/70**	**CLCD 63**	R900542886	200	63	140	63	112	33	20
125	**80/90**	**CLCD 80**	R900542887	320	80	170	80	140	39	26
140	**90/100**	**CLCD 90**	[3]	400	90	190	90	160	45	28
160	**100/110**	**CLCD 100**	[3]	500	100	210	100	180	45	30
180	**110/125**	**CLCD 110**	[3]	635	110	240	110	200	52	31
200	**125/140**	**CLCD 125**	[3]	800	125	270	125	230	52	32

ØAL	ØMM	Type	LE min	MR max	RC JS14	ØS	SL	TB JS14	UR max	UH max	*m* [2] kg
40	**25/28**	**CLCD 25**	37	25	40	20	69	85	70	113	1.9
50	**32/36**	**CLCD 32**	43	32	50	26	87	110	85	143	3
63	**40/45**	**CLCD 40**	52	40	65	33	110	130	108	170	5.5
80	**50/56**	**CLCD 50**	65	50	80	40	133	170	130	220	10.6
100	**63/70**	**CLCD 63**	75	63	100	48	164	210	160	270	17
125	**80/90**	**CLCD 80**	95	80	125	57	202	250	210	320	32
140	**90/100**	**CLCD 90**	108	90	140	66	224	290	230	370	[3]
160	**100/110**	**CLCD 100**	120	100	160	66	246	315	260	400	[3]
180	**110/125**	**CLCD 110**	138	110	180	76	277	350	290	445	[3]
200	**125/140**	**CLCD 125**	170	125	200	76	310	385	320	470	[3]

Note:

Geometry and dimensions may differ depending on the manufacturer.

In case of combination with other mounting elements, the usability must be checked.

ØAL = Piston Ø

ØMM = Piston rod Ø

[1] Related bolt Ø m6
(bolt and bolt lock are included in the scope of delivery and not mounted upon delivery)

[2] ***m*** = weight of clevis bracket in kg

[3] On request

Blocked for new application / Für Neuanwendung gesperrt

Buckling

For the admissible stroke length with flexibly guided load and a factor of 3.5 for safety against buckling, please refer to the relevant table. For other installation positions of the cylinder, the admissible stroke length must be interpolated. Admissible stroke length for non-guided load on request. Buckling calculations are carried out according to the following formulas:

1. Calculation according to Euler

$$F = \frac{\pi^2 \cdot E \cdot I}{v \cdot L_K^2} \qquad \text{if } \lambda > \lambda_g$$

2. Calculation according to Tetmajer

$$F = \frac{d^2 \cdot \pi \,(335 - 0.62 \cdot \lambda)}{4 \cdot v} \qquad \text{if } \lambda \le \lambda_g$$

Influence of the type of mounting on the bending length:

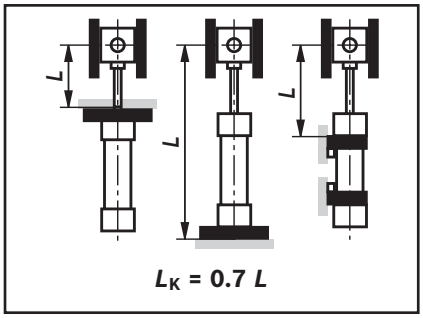

$L_K = 0.7\ L$

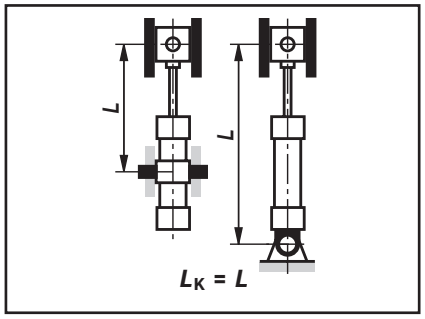

$L_K = L$

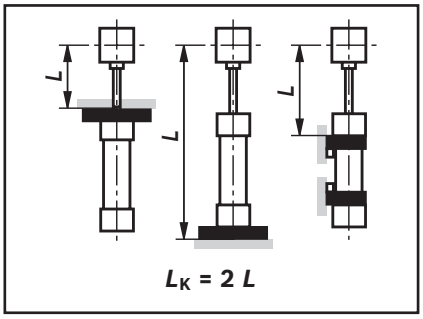

$L_K = 2\ L$

Explanation:

E = module of elasticity in N/mm²
= 2.1 x 10^5 for steel

I = geometrical moment of inertia in mm⁴ for circular cross-section $= \frac{d^4 \cdot \pi}{64} = 0.0491 \cdot d^4$

v = 3.5 (safety factor)

L_K = free bending length in mm (depending on the type of mounting see sketches A, B, C)

d = Piston rod Ø in mm

λ = Slenderness ratio
$= \frac{4 \cdot L_K}{d}$ $\qquad \lambda_g = \pi \sqrt{\frac{E}{0.8 \cdot R_e}}$

R_e = yield strength of the piston rod material

Admissible stroke length
(dimensions in mm)

Type of mounting CDH2/CSH2 [2]: MP3, MP5

ØAL	ØMM	Admissible stroke length with 100 bar 0 °	100 bar 45 °	100 bar 90 °	160 bar 0 °	160 bar 45 °	160 bar 90 °	250 bar 0 °	250 bar 45 °	250 bar 90 °
40	25	195	200	215	130	135	140	40	45	55
	28	385	400	445	295	300	320	215	220	225
50	32	380	390	430	280	285	300	195	200	205
	36	505	525	595	395	405	430	290	295	305
63	40	480	500	550	365	370	385	255	260	265
	45	640	660	750	505	515	550	380	385	395
80	50	590	615	690	455	465	495	330	335	345
	56	765	800	930	615	630	685	470	475	495
100	63	750	780	910	595	610	660	445	455	470
	70	940	985	1195	775	800	885	605	615	650
125	80	970	1015	1200	780	805	880	595	605	635
	90	1235	1300	1610	1030	1070	1200	825	840	895
140	90	1075	1130	1360	875	905	1000	675	685	725
	100	1335	1405	1770	1120	1165	1325	900	920	985
160	100	1175	1230	1480	955	985	1085	735	750	785
	110	1430	1500	1875	1195	1240	1400	955	975	1040
180	110	1250	1310	1570	1010	1045	1150	775	790	830
	125	1620	1710	2160	1365	1420	1620	1100	1125	1205
200	125	1435	1510	1860	1180	1220	1365	915	935	990
	140	1795	1900	2450	1525	1590	1840	1240	1270	1370
220	140	1620	1710	2180	1360	1415	1630	1090	1120	1200
	160	2075	2200	3000	1810	1890	2280	1510	1560	1730
250	160	1805	1910	2490	1520	1590	1850	1220	1250	1360
	180	2250	2395	3300	1960	2060	2500	1630	1690	1880
280	180	2075	2200	2900	1775	1880	2170	1450	1490	1620
	200	2510	2670	3700	2200	2310	2820	1850	1920	2140
320	200	2135	2270	3030	1820	1900	2260	1470	1510	1660
	220	2550	2720	3820	2230	2340	2880	1860	1930	2170

Installation position

0 °

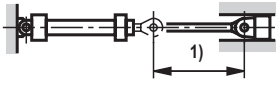

45 °

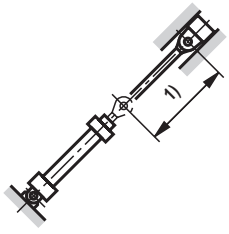

90 °

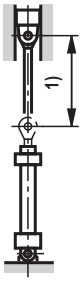

[1] Adm. Stroke length

Blocked for new application / Für Neuanwendung gesperrt

Admissible stroke length
(dimensions in mm)

Type of mounting CDH2/CGH2/CSH2 [2]: MF3

ØAL	ØMM	Admissible stroke length with 100 bar 0 °	100 bar 45 °	100 bar 90 °	160 bar 0 °	160 bar 45 °	160 bar 90 °	250 bar 0 °	250 bar 45 °	250 bar 90 °
40	25	895	915	980	730	735	760	440	450	510
	28	1400	1415	1630	1180	1205	1275	970	980	1010
50	32	1440	1490	1670	1210	1230	1300	985	995	1025
	36	1760	1830	2000	1510	1545	1675	1255	1270	1320
63	40	1735	1800	2000	1475	1510	1620	1215	1230	1270
	45	2000	2000	2000	1830	1880	2080	1540	1560	1640
80	50	2000	2000	2000	1810	1850	1995	1495	1515	1570
	56	2000	2000	2000	2000	2000	2000	1870	1900	2000
100	63	2580	2690	3000	2235	2300	2550	1875	1910	2010
	70	3000	3000	3000	2690	2780	3000	2300	2350	2520
125	80	3000	3000	3000	2840	2930	3000	2400	2450	2590
	90	3000	3000	3000	3000	3000	3000	3000	3000	3000
140	90	3000	3000	3000	3000	3000	3000	2700	2760	2950
	100	3000	3000	3000	3000	3000	3000	3000	3000	3000
160	100	3000	3000	3000	3000	3000	3000	2920	2980	3000
	110	3000	3000	3000	3000	3000	3000	3000	3000	3000
180	110	3000	3000	3000	3000	3000	3000	3000	3000	3000
	125	3000	3000	3000	3000	3000	3000	3000	3000	3000
200	125	3000	3000	3000	3000	3000	3000	3000	3000	3000
	140	3000	3000	3000	3000	3000	3000	3000	3000	3000
220	140	5400	5680	6000	4800	4980	5780	4120	4220	4560
	160	6000	6000	6000	5820	6000	6000	5150	5330	6000
250	160	5850	6000	6000	5270	5500	6000	4600	4740	5250
	180	6000	6000	6000	6000	6000	6000	5650	5850	6000
280	180	6000	6000	6000	6000	6000	6000	5270	5420	5970
	200	6000	6000	6000	6000	6000	6000	6000	6000	6000
320	200	6000	6000	6000	6000	6000	6000	5950	6000	6000
	220	6000	6000	6000	6000	6000	6000	6000	6000	6000

Installation position

0 °

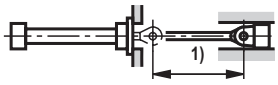

45 °

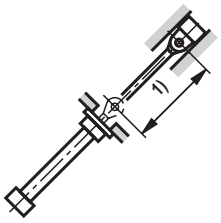

90 °

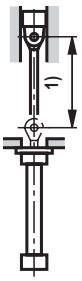

[1] Adm. Stroke length

Type of mounting CDH2/CSH2 [2]: MF4

ØAL	ØMM	Admissible stroke length with 100 bar 0 °	100 bar 45 °	100 bar 90 °	160 bar 0 °	160 bar 45 °	160 bar 90 °	250 bar 0 °	250 bar 45 °	250 bar 90 °
40	25	325	340	370	245	250	260	105	110	140
	28	565	590	695	465	475	520	365	370	385
50	32	600	625	715	485	495	530	370	375	390
	36	755	790	950	630	650	715	505	515	540
63	40	730	765	905	600	615	675	470	480	500
	45	920	965	1190	780	805	905	630	645	685
80	50	910	950	1130	750	775	845	595	605	630
	56	1125	1185	1470	960	990	1120	785	800	850
100	63	1120	1175	1460	945	980	1105	770	785	835
	70	1350	1430	1860	1175	1220	1420	980	1000	1090
125	80	1430	1510	1910	1225	1270	1450	1000	1025	1100
	90	1750	1855	2490	1540	1610	1910	1300	1340	1470
140	90	1585	1675	2170	1370	1425	1650	1135	1165	1260
	100	1895	2010	2750	1675	1755	2110	1425	1470	1630
160	100	1725	1820	2340	1490	1545	1780	1230	1260	1360
	110	2030	2150	2900	1785	1870	2230	1510	1560	1720
180	110	1855	1960	2510	1595	1660	1910	1315	1350	1450
	125	2300	2440	3350	2040	2130	2580	1735	1790	1990
200	125	2105	2230	2950	1830	1910	2250	1530	1570	1715
	140	2535	2700	3000	2260	2370	2920	1940	2010	2255
220	140	2250	2400	3350	1990	2090	2550	1685	1740	1950
	160	2800	2990	4500	2530	2680	3480	2220	2310	2700
250	160	2600	2770	3900	2310	2430	3000	1975	2040	2300
	180	3130	3350	5050	2840	3000	3910	2500	2600	3040
280	180	2850	3050	4400	2550	2680	3370	2190	2270	2600
	200	3370	3610	5550	3070	3250	4300	2700	2820	3330
320	200	3070	3270	4750	2750	2890	3650	2150	2460	2810
	220	3560	3820	5850	3250	3430	4550	2860	2980	3530

Installation position

0 °

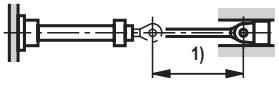

45 °

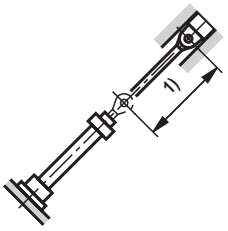

90 °

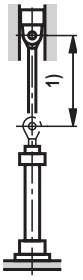

[1] Adm. Stroke length

Blocked for new application / Für Neuanwendung gesperrt

Admissible stroke length

(dimensions in mm)

Type of mounting CDH2/CGH2/CSH2 [2]: MT4 trunnion in cylinder center

ØAL	ØMM	Admissible stroke length with 100 bar 0°	100 bar 45 °	100 bar 90 °	160 bar 0°	160 bar 45 °	160 bar 90 °	250 bar 0°	250 bar 45 °	250 bar 90 °
40	25	340	345	365	250	255	260	130	135	145
	28	590	605	665	470	480	500	365	370	375
50	32	600	615	670	470	480	495	355	360	365
	36	770	795	890	625	635	670	485	490	505
63	40	740	765	845	590	600	630	450	455	465
	45	940	975	1115	770	790	845	610	620	640
80	50	920	950	1055	735	750	790	570	575	590
	56	1155	1195	1375	950	975	1045	755	765	790
100	63	1145	1190	1365	940	960	1030	740	750	775
	70	1400	1460	1740	1180	1210	1330	955	970	1015
125	80	1470	1530	1780	1220	1250	1350	970	985	1020
	90	1820	1910	2320	1550	1600	1780	1275	1300	1370
140	90	1640	1710	2020	1370	1410	1540	1100	1120	1170
	100	1980	2080	2570	1700	1755	1970	1400	1430	1515
160	100	1780	1850	2180	1485	1520	1660	1190	1210	1260
	110	2110	2210	2710	1800	1860	2080	1480	1510	1595
180	110	1910	1990	2340	1590	1635	1780	1275	1295	1350
	125	2405	2530	3000	2065	2130	2400	1710	1740	1850
200	125	2180	2280	2740	1840	1890	2090	1490	1510	1590
	140	2660	2800	3000	2300	2380	2720	1915	1960	2100
220	140	2490	2510	3150	2050	2120	2400	1685	1720	1835
	160	3000	3170	4230	2640	2750	3260	2240	2310	2530
250	160	2730	2870	3640	2350	2440	2790	1950	1990	2140
	180	3320	3520	4720	2940	3060	3650	2500	2570	2830
280	180	3040	3210	4140	2640	2750	3170	2210	2260	2440
	200	3620	3840	5210	3210	3360	4040	2750	2830	3140
320	200	3250	3430	4455	2820	2930	3410	2360	2420	2620
	220	3800	4030	5500	3370	3530	4250	2880	2970	3290

Installation position

0°

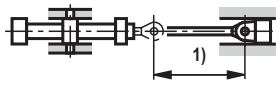

45 °

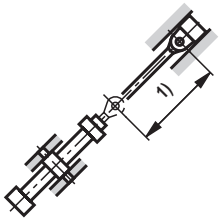

90 °

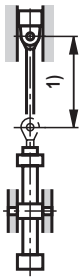

[1] Adm. Stroke length

Type of mounting CDH2/CGH2/CSH2 [2]: MS2

ØAL	ØMM	Admissible stroke length with 100 bar 0°	100 bar 45 °	100 bar 90 °	160 bar 0°	160 bar 45 °	160 bar 90 °	250 bar 0°	250 bar 45 °	250 bar 90 °
40	22	825	840	885	645	650	665	370	375	410
	28	1305	1350	1535	1085	1110	1180	875	885	910
50	28	1330	1375	1560	1095	1120	1190	875	885	910
	36	1645	1715	2030	1395	1430	1560	1140	1160	1210
63	36	1610	1670	1950	1345	1380	1490	1085	1100	1145
	45	1980	2000	2000	1700	1750	1950	1410	1435	1510
80	45	1980	2000	2000	1665	1710	1850	1350	1370	1425
	56	2000	2000	2000	2000	2000	2000	1730	1760	1860
100	56	2420	2535	3000	2080	2140	2390	1720	1750	1850
	70	2880	3000	3000	2530	2630	3000	2140	2190	2360
125	70	3000	3000	3000	2660	2750	3000	2220	2270	2410
	90	3000	3000	3000	3000	3000	3000	2810	2890	3000
140	90	3000	3000	3000	2970	3000	3000	2490	2550	2740
	100	3000	3000	3000	3000	3000	3000	3000	3000	3000
160	100	3000	3000	3000	3000	3000	3000	2690	2750	2950
	110	3000	3000	3000	3000	3000	3000	3000	3000	3000
180	110	3000	3000	3000	3000	3000	3000	2890	2960	3000
	125	3000	3000	3000	3000	3000	3000	3000	3000	3000
200	125	3000	3000	3000	3000	3000	3000	3000	3000	3000
	140	3000	3000	3000	3000	3000	3000	3000	3000	3000
220	140	5090	5370	6000	4490	4670	5470	3820	3910	4260
	160	6000	6000	6000	5510	5800	6000	4850	5020	5750
250	160	5520	5860	6000	4940	5170	6000	4270	4410	4920
	180	6000	6000	6000	6000	6000	6000	5320	5520	6000
280	180	6000	6000	6000	5700	5960	6000	4930	5070	5630
	200	6000	6000	6000	6000	6000	6000	6000	6000	6000
320	200	6000	6000	6000	5890	6000	6000	4750	5310	6000
	220	6000	6000	6000	6000	6000	6000	6000	6000	6000

Installation position

0°

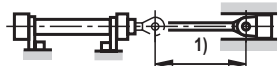

45 °

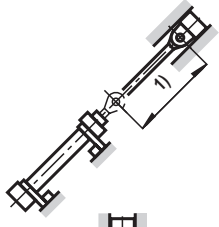

90 °



[1] Adm. Stroke length

With longer strokes, an extended guide and/or the use of guide rings may be reasonable for increasing the service life, depending on the respective case of application and installation position. Recommendation on request.

[2] With CSH2, observe the maximum stroke length "X*max", pages 30 to 41

Blocked for new application / Für Neuanwendung gesperrt

End position cushioning

End position cushioning:

The objective is to reduce the velocity of a moved mass, the center of gravity of which lies on the cylinder axis, to a level at which neither the cylinder nor the machine into which the cylinder is installed is damaged.
For velocities above 20 mm/s, we recommend the use of an end position cushioning feature, which absorbs energy without requiring the use of additional equipment.
It must, however, always be checked whether end position cushioning is also required for lower velocities with large masses.

Damping capacity:

When decelerating masses via end position cushioning, the structural-inherent damping capacity must not be exceeded. Cylinders with end position cushioning can achieve their full damping capacity only over the entire stroke length.
With the adjustable end position cushioning version "E", a throttle valve is additionally provided when compared with version "D". End position cushioning version "E" allows cycle times to be optimized. The max. damping capacity can only be achieved when the throttle valve is closed.
The calculation depends on the factors mass, velocity, system pressure and installation position. For this reason, mass and velocity are used to determine the characteristic D_m and system pressure and installation position to determine the characteristic D_p.
These two characteristics are used for verifying the admissible damping capacity in the "damping capacity" diagram. The intersection point of the characteristics D_m and D_p must always be below the damping capacity curve of the selected cylinder. The values in the diagrams refer to an average oil temperature of +45 to +65 °C with the throttle valve being closed.
For special applications with very short stroke times, high velocities or large masses, cylinders with special end position cushioning versions can be offered on request.
When fixed or adjustable stops are used, special measures must be taken!

Formulas:

$$D_m = \frac{m}{10^K} \; ; \; K = kv\,(0.5 - v)$$

m = moved mass in kg
v = stroke velocity in m/s
kv = see table page 69

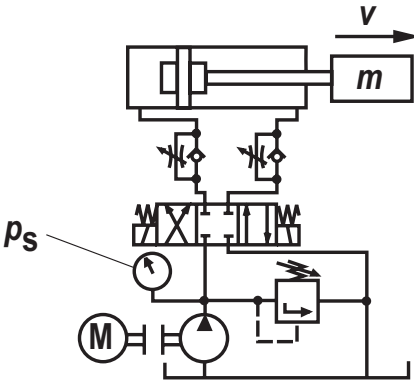

Extension for CDH2 and CSH2

$$D_p = p_S - \frac{m \cdot 9.81 \cdot \sin\alpha}{A_1 \cdot 10}$$

Retraction for CDH2, CGH2 and CSH2; extension for CGH2

$$D_p = p_S + \frac{m \cdot 9.81 \cdot \sin\alpha}{A_3 \cdot 10}$$

p_S = system pressure in bar
A_1 = piston area in cm² (see page 14)
A_3 = annulus area in cm² (see page 14)
α = angle to the horizontal in degree

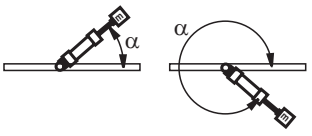

Damping length

With cylinder strokes within the damping lengths, restrictions with regard to velocity / cycle time are possible.
We recommend minimum stroke greater than the damping length plus 10 mm!

ØAL mm	40	50	63	80	100	125	140	160	180	200	220	250	280	320
Head side	21	20	23	25	25	25	33	33	37	37	76	81	86	90
Base side	21	20	23	25	25	25	33	33	37	37	76	81	86	90

Blocked for new application / Für Neuanwendung gesperrt

End position cushioning

ØAL mm	40	50	63	80	100	125	140	160	180	200	220	250	280	320
kv ①	2.85	2.97	2.56	2.82	3.51	3.02	2.53	2.65	2.91	2.76	2.85	2.95	3.11	3.13
kv ②	3.1	3.25	2.85	2.85	3.52	2.91	2.53	2.93	2.95	2.95	2.93	3.1	3.12	3.07
kv ③	2.95	3.1	2.73	3.1	3.51	2.95	2.51	2.91	2.95	2.91	2.93	2.93	3.15	3.25

Damping capacity: Extension for CDH2 and CSH2, with *kv* ①

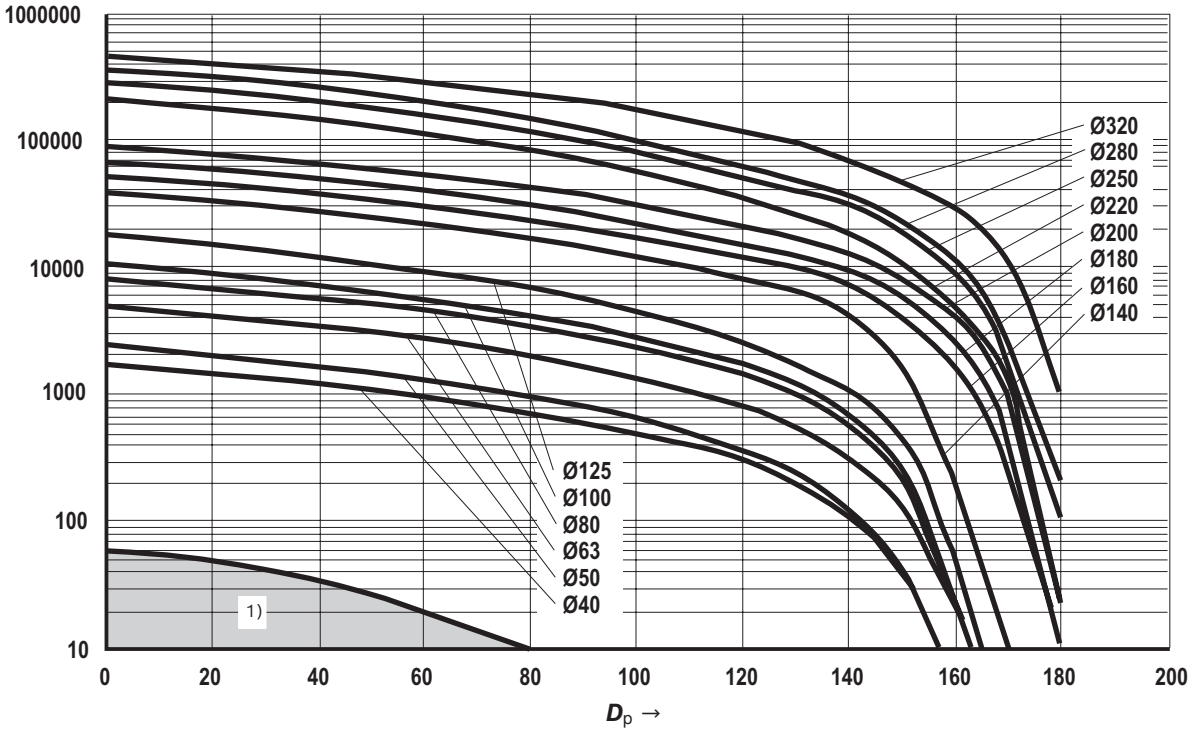

ØAL = piston Ø

1) If with standard applications the calculated intersection point of D_m and D_p is within the marked area, we recommend designing the cylinder without end position cushioning.

Blocked for new application / Für Neuanwendung gesperrt

End position cushioning

Damping capacity: Retraction for CDH2, CGH2 and CSH2; extension for CGH2 with *kv* ②

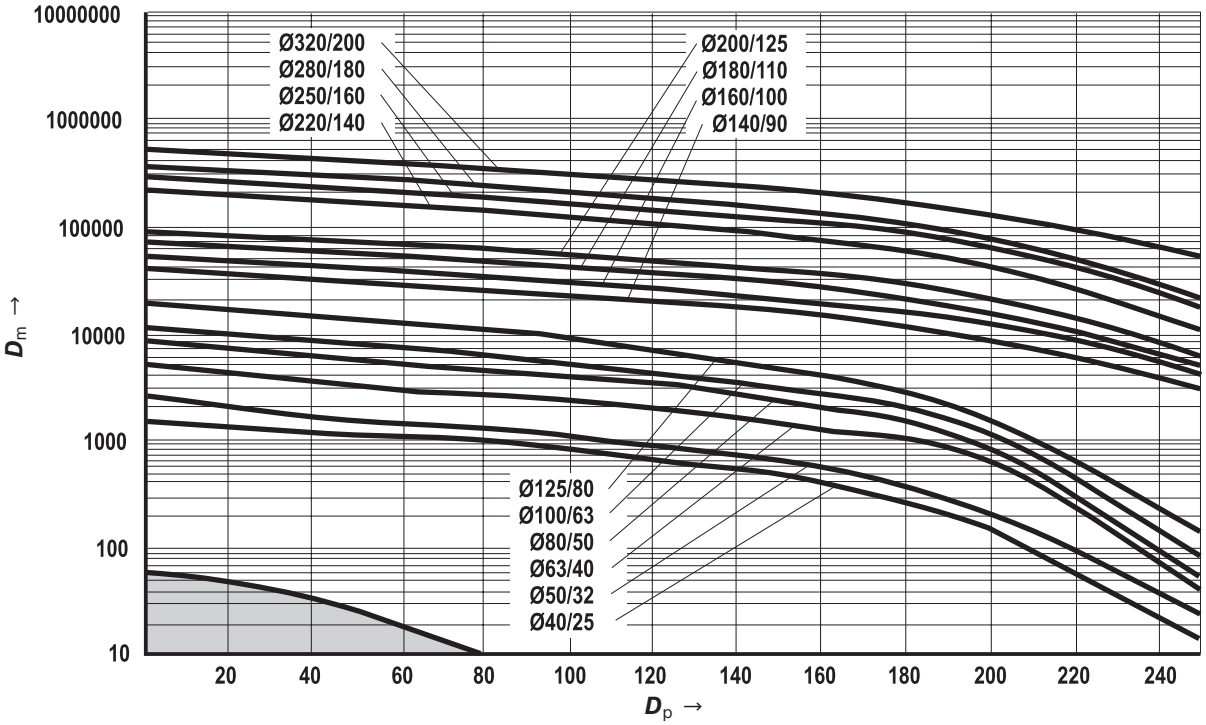

Damping capacity: Retraction for CDH2, CGH2 and CSH2; extension for CGH2 with *kv* ③

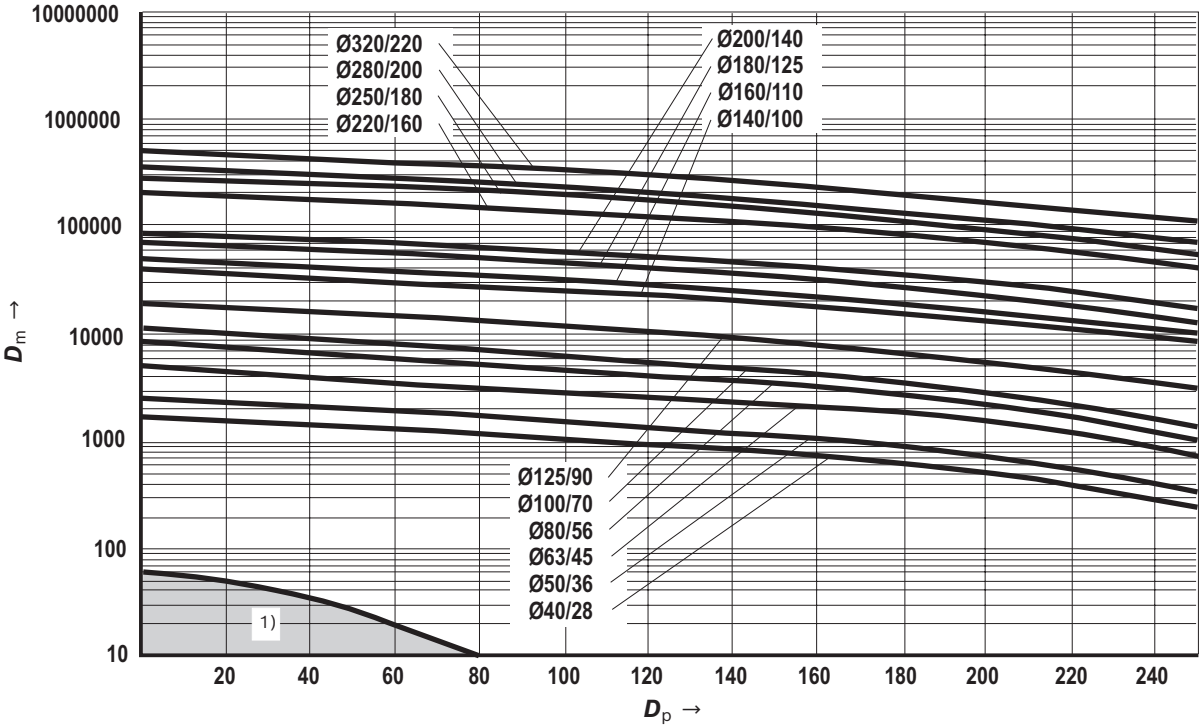

[1] If with standard applications the calculated intersection point of D_m and D_p is within the marked area, we recommend designing the cylinder without end position cushioning.

Blocked for new application / Für Neuanwendung gesperrt

Selection criteria for seals

The specified values are to be regarded as guidelines; depending on the application, it may be necessary to check the suitability of the seal system. Generally, a medium temperature of approx. 40 °C is recommended. For detailed information, please contact your local Bosch Rexroth distribution organization under www.boschrexroth.com.

	Work and environmental conditions	Seal versions								
		M	G	V	L	A	B	T	R	S
Medium / temperature	**Medium HL, HLP** / operating temperature medium –20 °C ... +80 °C	++	++	++	++	++	++	++	++	++
	Medium HFA / operating temperature medium +5 °C ... +55 °C	+/–	+/–	+/–	+/–	+	+/–	++	+/–	+/–
	Medium HFC / operating temperature medium –20 °C ... +60 °C	–	++	–	–	+/–	–	++	–	–
	Medium HFDR / operating temperature medium –15 °C ... +80 °C	–	–	++	–	–	++	–	–	++
	Medium HFDU / operating temperature medium –15 °C ... +80 °C	–	–	++	–	–	++	–	–	++
	Ambient and rod temperature in the area of the piston rod from –20 °C ... +80 °C [1]	++	+	+ [2]	++	++	+ [2]	+	++	++ [2]
	Extended ambient and rod temperature in the area of the piston rod from +80 °C ... +120 °C [1]	–	–	++	–	–	+	–	–	++
Function / velocity...	static hold function more than 10 minutes: Attention! Application- and temperature-dependent	++	+	+	+	++	++	+	+	+
	Static hold function short-time < 1 minute	++	++	++	++	++	++	++	++	++
	Robust application conditions: Steel works, mining, thin ice	++	++	++	++	++	++	–	++	–
	Zero point control, hardly any amplitude, frequency max. 2 Hz, not longer than 5 minutes	–	–	–	+/–	–	–	++	+	++
	Cylinder velocity min. 0.001 m/sec stick-slip behavior	++	+	+	++	–	–	++	++	++
	Cylinder velocity from 0.01 m/sec to 0.5 m/sec [3]	++	+	+	++	+	+	++	++	++
	Cylinder velocity > 0.5 m/sec to max. 0.8 m/sec [3]	–	+/–	+/–	++	–	–	++	+	++
	Stroke > 1.0 m	+/–	++	++	++	++	++	++	++	++
	Standstill period (wear)	++	+/–	+/–	++	+/–	–	++	++	++
	Undissolved air in the oil [4]	–	+	+	+	–	–	+	+	+

++ = very good + = good +/– = conditional, depending on the application parameters – = inappropriate

General technical data in corresponding data sheets will remain valid, see page 11!

1) Moreover, observe the corresponding medium temperature range
2) Lower temperature limit –15 °C
3) Standard line connections not designed for that velocity
4) – Seal is destroyed / + Seal is not directly destroyed, leakage may occur

Blocked for new application / Für Neuanwendung gesperrt

Seal kits [1)]

CDH2 – Standard

ØAL	ØMM	Material no. for seal design								
		M	G	V	L	A	B	T	R	S
40	25	R901010141	R961006001	R961006036	R961006071	R901010145	R901010147	R901010143	R961006106	R901010146
	28	R900851087	R961006002	R961006037	R961006072	R900859445	R900859770	R900858841	R961006107	R900861001
50	32	R900860274	R961006004	R961006039	R961006074	R900860929	R900860939	R900860275	R961006109	R900861003
	36	R900849392	R961006005	R961006040	R961006075	R900851515	R900860940	R900860277	R961006110	R900861004
63	40	R900859509	R961006007	R961006042	R961006077	R900851637	R900860941	R900860279	R961006112	R900861006
	45	R900847956	R961006008	R961006043	R961006078	R900851638	R900859678	R900847855	R961006113	R900861007
80	50	R900857129	R961006010	R961006045	R961006080	R900856092	R900860943	R900860281	R961006115	R900861009
	56	R900850905	R961006011	R961006046	R961006081	R900854718	R900851205	R900856180	R961006116	R900861010
100	63	R900860283	R961006013	R961006048	R961006083	R900856093	R900860945	R900860284	R961006118	R900861012
	70	R900853382	R961006014	R961006049	R961006084	R900856094	R900860946	R900860285	R961006119	R900861013
125	80	R900860287	R961006016	R961006051	R961006086	R900860931	R900860950	R900860288	R961006121	R900861015
	90	R900857949	R961006017	R961006052	R961006087	R900856095	R900855464	R900856102	R961006122	R900861016
140	90	R900858281	R961006018	R961006053	R961006088	R900860932	R900860951	R900860289	R961006123	R900861017
	100	R900853965	R961006019	R961006054	R961006089	R900856096	R900860952	R900860290	R961006124	R900849080
160	100	R900855683	R961006020	R961006055	R961006090	R900860468	R900860953	R900860291	R961006125	R900861018
	110	R900851146	R961006021	R961006056	R961006091	R900860933	R900860954	R900857536	R961006126	R900861019
180	110	R900856497	R961006023	R961006058	R961006093	R900860934	R900860955	R900852561	R961006128	R900861020
	125	R900848603	R961006024	R961006059	R961006094	R900860935	R900860956	R900860292	R961006129	R900861021
200	125	R900860294	R961006025	R961006060	R961006095	R900860936	R900860957	R900860295	R961006130	R900861022
	140	R900856431	R961006026	R961006061	R961006096	R900860937	R900860958	R900860293	R961006131	R900861023
220	140	R900888100	R961006027	R961006062	R961006097	R900888116	R900888140	R900888108	R961006132	R900888132
	160	R900888101	R961006028	R961006063	R961006098	R900888117	R900888141	R900888109	R961006133	R900888133
250	160	R900888102	R961006029	R961006064	R961006099	R900888118	R900888142	R900888110	R961006134	R900888134
	180	R900888103	R961006030	R961006065	R961006100	R900888119	R900888143	R900888111	R961006135	R900888135
280	180	R900888104	R961006031	R961006066	R961006101	R900888120	R900888144	R900888112	R961006136	R900888136
	200	R900888105	R961006032	R961006067	R961006102	R900888121	R900888145	R900888113	R961006137	R900888137
320	200	R900888106	R961006033	R961006068	R961006103	R900888122	R900888146	R900888114	R961006138	R900888138
	220	R900888107	–	–	R961006104	R900888123	R900888147	R900888115	R961006139	R900888139

ØAL = piston Ø

ØMM = piston rod Ø

[1)] Seal kits for proximity switches and subplate mounting separate material no.

Blocked for new application / Für Neuanwendung gesperrt

Seal kits [1)]

CGH2 – Standard

ØAL	ØMM	Material no. for seal design								
		M	G	V	L	A	B	T	R	S
40	25	R901010159	R961006222	R961006257	R961006292	R901010162	R901010170	R901010161	R961006327	R901010169
	28	R900867252	R961006223	R961006258	R961006293	R900866747	R900867133	R900868889	R961006328	R900868943
50	32	R900867254	R961006225	R961006260	R961006295	R900866749	R900867135	R900868891	R961006330	R900868945
	36	R900864930	R961006226	R961006261	R961006296	R900866750	R900867136	R900868892	R961006331	R900868946
63	40	R900867261	R961006228	R961006263	R961006298	R900866752	R900867138	R900868894	R961006333	R900868948
	45	R900867262	R961006229	R961006264	R961006299	R900866753	R900867139	R900868895	R961006334	R900868949
80	50	R900867264	R961006231	R961006266	R961006301	R900866755	R900867141	R900868897	R961006336	R900868951
	56	R900867265	R961006232	R961006267	R961006302	R900866756	R900867142	R900868898	R961006337	R900868952
100	63	R900867267	R961006234	R961006269	R961006304	R900866758	R900867144	R900868900	R961006339	R900868954
	70	R900867268	R961006235	R961006270	R961006305	R900866759	R900867146	R900868901	R961006340	R900868955
125	80	R900860730	R961006237	R961006272	R961006307	R900866761	R900867148	R900868903	R961006342	R900868956
	90	R900867270	R961006238	R961006273	R961006308	R900866762	R900867149	R900868904	R961006343	R900868957
140	90	R900867271	R961006239	R961006274	R961006309	R900866763	R900867150	R900868905	R961006344	R900868958
	100	R900867272	R961006240	R961006275	R961006310	R900866764	R900867151	R900868906	R961006345	R900868959
160	100	R900867273	R961006241	R961006276	R961006311	R900866765	R900867152	R900868907	R961006346	R900868960
	110	R900867274	R961006242	R961006277	R961006312	R900866766	R900867153	R900868908	R961006347	R900868961
180	110	R900867275	R961006244	R961006279	R961006314	R900866767	R900867154	R900868909	R961006349	R900868962
	125	R900867276	R961006245	R961006280	R961006315	R900866768	R900867155	R900868910	R961006350	R900868963
200	125	R900867277	R961006246	R961006281	R961006316	R900866769	R900867156	R900868911	R961006351	R900868964
	140	R900867278	R961006247	R961006282	R961006317	R900866770	R900867157	R900868912	R961006352	R900868965
220	140	R900888020	R961006248	R961006283	R961006318	R900888036	R900888060	R900888028	R961006353	R900888052
	160	R900888021	R961006249	R961006284	R961006319	R900888037	R900888061	R900888029	R961006354	R900888053
250	160	R900888022	R961006250	R961006285	R961006320	R900888038	R900888062	R900888030	R961006355	R900888054
	180	R900888023	R961006251	R961006286	R961006321	R900888039	R900888063	R900888031	R961006356	R900888055
280	180	R900888024	R961006252	R961006287	R961006322	R900888040	R900888064	R900888032	R961006357	R900888056
	200	R900888025	R961006253	R961006288	R961006323	R900888041	R900888065	R900888033	R961006358	R900888057
320	200	R900888026	R961006254	R961006289	R961006324	R900888042	R900888066	R900888034	R961006359	R900888058
	220	R900888027	–	–	R961006325	R900888043	R900888067	R900888035	R961006360	R900888059

ØAL = piston Ø

ØMM = piston rod Ø

1) Seal kits for proximity switches and subplate mounting separate material no.

Blocked for new application / Für Neuanwendung gesperrt

Seal kits [1)]

CDH2 – Standard + additional option F

ØAL	ØMM	Material no. for seal design					
		M+F	G+F	V+F	T+F	R+F	S+F
40	25	R901010148	R961006141	R961006168	R901010149	R961006195	R901010150
	28	R900861025	R961006142	R961006169	R900861050	R961006196	R900861100
50	32	R900861027	R961006144	R961006171	R900861052	R961006198	R900861102
	36	R900861028	R961006145	R961006172	R900861053	R961006199	R900861103
63	40	R900861030	R961006147	R961006174	R900861055	R961006201	R900861105
	45	R900861031	R961006148	R961006175	R900861056	R961006202	R900861106
80	50	R900861033	R961006150	R961006177	R900861058	R961006204	R900861108
	56	R900861034	R961006151	R961006178	R900861059	R961006205	R900861109
100	63	R900861036	R961006153	R961006180	R900861061	R961006207	R900861114
	70	R900861037	R961006154	R961006181	R900861062	R961006208	R900861115
125	80	R900861039	R961006156	R961006183	R900861064	R961006210	R900861120
	90	R900861040	R961006157	R961006184	R900861065	R961006211	R900861122
140	90	R900861041	R961006158	R961006185	R900861066	R961006212	R900861124
	100	R900861042	R961006159	R961006186	R900861067	R961006213	R900861126
160	100	R900861043	R961006160	R961006187	R900861068	R961006214	R900861128
	110	R900861044	R961006161	R961006188	R900861069	R961006215	R900861130
180	110	R900861045	R961006163	R961006190	R900861070	R961006217	R900861133
	125	R900861046	R961006164	R961006191	R900861071	R961006218	R900861135
200	125	R900861047	R961006165	R961006192	R900861072	R961006219	R900861142
	140	R900861048	R961006166	R961006193	R900861073	R961006220	R900861143

CGH2 – Standard + additional option F

ØAL	ØMM	Material no. for seal design					
		M+F	G+F	V+F	T+F	R+F	S+F
40	25	R901010151	R961006362	R961006389	R901010154	R961006416	R901010156
	28	R900868999	R961006363	R961006390	R900869026	R961006417	R900869093
50	32	R900869001	R961006365	R961006392	R900869028	R961006419	R900869095
	36	R900869002	R961006366	R961006393	R900869029	R961006420	R900869096
63	40	R900869004	R961006368	R961006395	R900869031	R961006422	R900869098
	45	R900869005	R961006369	R961006396	R900869032	R961006423	R900869099
80	50	R900869007	R961006371	R961006398	R900869034	R961006425	R900869101
	56	R900869008	R961006372	R961006399	R900869035	R961006426	R900869102
100	63	R900869012	R961006374	R961006401	R900869037	R961006428	R900869104
	70	R900869013	R961006375	R961006402	R900869038	R961006429	R900869105
125	80	R900869015	R961006377	R961006404	R900869040	R961006431	R900869107
	90	R900869016	R961006378	R961006405	R900869041	R961006432	R900869108
140	90	R900869017	R961006379	R961006406	R900869042	R961006433	R900869109
	100	R900869018	R961006380	R961006407	R900869043	R961006434	R900869110
160	100	R900869019	R961006381	R961006408	R900869044	R961006435	R900869111
	110	R900869020	R961006382	R961006409	R900869045	R961006436	R900869112
180	110	R900869021	R961006384	R961006411	R900869046	R961006438	R900869113
	125	R900869022	R961006385	R961006412	R900869047	R961006439	R900869114
200	125	R900869023	R961006386	R961006413	R900869048	R961006440	R900869115
	140	R900869024	R961006387	R961006414	R900869049	R961006441	R900869116

ØAL = piston Ø
ØMM = piston rod Ø

[1)] Seal kits for proximity switches and subplate mounting separate material no.

Blocked for new application / Für Neuanwendung gesperrt

Seal kits [2)]

CSH2

ØAL	ØMM	Material no. for seal design						
		M	T	G	L	R	S	V
40	28	R900861025	R900861050	R961006142	R961006072	R961006196	R900861100	R961006169
50	32	R900861027	R900861052	R961006144	R961006074	R961006198	R900861102	R961006171
	36	R900861028	R900861053	R961006145	R961006075	R961006199	R900861103	R961006172
63	40	R900861030	R900861055	R961006147	R961006077	R961006201	R900861105	R961006174
	45	R900861031	R900861056	R961006148	R961006078	R961006202	R900861106	R961006175
80	50	R900861033	R900861058	R961006150	R961006080	R961006204	R900861108	R961006177
	56	R900861034	R900861059	R961006151	R961006081	R961006205	R900861109	R961006178
100	63	R900861036	R900861061	R961006153	R961006083	R961006207	R900861114	R961006180
	70	R900861037	R900861062	R961006154	R961006084	R961006208	R900861115	R961006181
125	80	R900861039	R900861064	R961006156	R961006086	R961006210	R900861120	R961006183
	90	R900861040	R900861065	R961006157	R961006087	R961006211	R900861122	R961006184
140	90	R900861041	R900861066	R961006158	R961006088	R961006212	R900861124	R961006185
	100	R900861042	R900861067	R961006159	R961006089	R961006213	R900861126	R961006186
160	100	R900861043	R900861068	R961006160	R961006090	R961006214	R900861128	R961006187
	110	R900861044	R900861069	R961006161	R961006091	R961006215	R900861130	R961006188
180	110	R900861045	R900861070	R961006163	R961006093	R961006217	R900861133	R961006190
	125	R900861046	R900861071	R961006164	R961006094	R961006218	R900861135	R961006191
200	125	R900861047	R900861072	R961006165	R961006095	R961006219	R900861142	R961006192
	140	R900861048	R900861073	R961006166	R961006096	R961006220	R900861143	R961006193
220	140	R900888100	R900888108	R961006027	R961006097	R961006132	R900888116	R961006062
	160	R900888101	R900888109	R961006028	R961006098	R961006133	R900888117	R961006063
250	160	R900888102	R900888110	R961006029	R961006099	R961006134	R900888118	R961006064
	180	R900888103	R900888111	R961006030	R961006100	R961006135	R900888119	R961006065
280	180	R900888104	R900888112	R961006031	R961006101	R961006136	R900888120	R961006066
	200	R900888105	R900888113	R961006032	R961006102	R961006137	R900888121	R961006067
320	200	R900888106	R900888114	R961006033	R961006103	R961006138	R900888122	R961006068
	220	R900888107	R900888115	–	R961006104	R961006139	R900888123	–

ØAL = piston Ø
ØMM = piston rod Ø
2) Seal kits for position measurement system and subplate mounting separate material no.

Blocked for new application / Für Neuanwendung gesperrt

Seal kits

Only for proximity switches

ØAL	Material no. for seal design								
	M / M+F	T / T+F	G / G+F	L	R / R+F	A	S / S+F	V / V+F	B
40 ... 200	R900885938						R900885939		
220 ... 320	R900894997						R900894998		

Only for subplate mounting

ØAL	Material no. for seal design	
	M, T, G, L, R, A	S, B, V
40	R961006022	R961006243
50	R961006022	R961006243
63	R961006057	R961006278
80	R961006057	R961006278
100	R961006092	R961006313
125	R961006092	R961006313
140	R961006127	R961006348
160	R961006127	R961006348
180	R961006162	R961006383
200	R961006162	R961006383

Only for position measurement system

ØAL	Material no. for seal design	
	M, T, G, L, R	S, V
40	R900885935	R900885937
50	R900894958	R900894979
63	R900894959	R900894980
80	R900894960	R900894981
100	R900894961	R900894982
125	R900894962	R900894983
140	R900894963	R900894985
160	R900894964	R900894986
180	R900894973	R900894987
200	R900894974	R900894988
220	R900894975	R900894989
250	R900894976	R900894991
280	R900894977	R900894993
320	R900894978	R900894994

ØAL = piston Ø

Blocked for new application / Für Neuanwendung gesperrt

Tightening torques

Screws: Head and base (item 1 and 2)

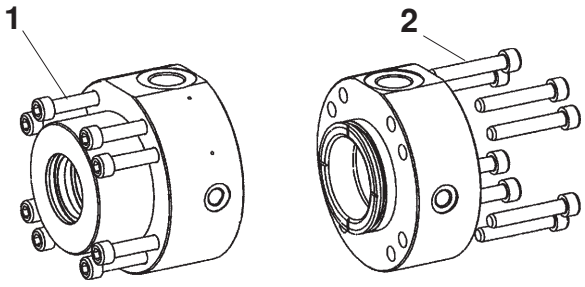

Series	Piston Ø	Screw	Quantity	Quality class	Tightening torque
CDH2 / CGH2 / CSH2	**40**	M8	4	10.9	23 Nm
CDH2 / CGH2 / CSH2	**50**	M8	8	10.9	20 Nm
CDH2 / CGH2 / CSH2	**63**	M8	8	10.9	30 Nm
CDH2 / CGH2 / CSH2	**80**	M10	8	10.9	55 Nm
CDH2 / CGH2 / CSH2	**100**	M12	8	10.9	100 Nm
CDH2 / CGH2 / CSH2	**125**	M16	8	10.9	200 Nm
CDH2 / CGH2 / CSH2	**140**	M16	12	10.9	170 Nm
CDH2 / CGH2 / CSH2	**160**	M16	12	10.9	220 Nm
CDH2 / CGH2 / CSH2	**180**	M20	12	10.9	350 Nm
CDH2 / CGH2 / CSH2	**200**	M20	12	10.9	410 Nm
CDH2 / CGH2 / CSH2	**220**	M20	16	10.9	460 Nm
CDH2 / CGH2 / CSH2	**250**	M24	16	10.9	700 Nm
CDH2 / CGH2 / CSH2	**280**	M30	12	10.9	1700 Nm
CDH2 / CGH2 / CSH2	**320**	M30	16	10.9	1500 Nm

Screws: Seal cover (item 3)

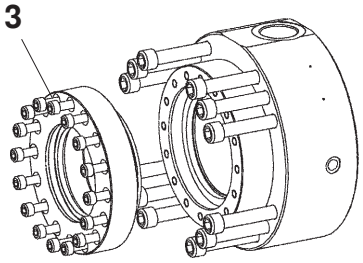

Only with seal design "A" and "B"

Series	Piston Ø	Piston rod Ø	Screw	Quantity	Quality class	Tightening torque
CDH2 / CGH2	**160**	**100**	M10	16	10.9	60 Nm
		110				
CDH2 / CGH2	**180**	**110**	M12	16	10.9	80 Nm
		125				
CDH2 / CGH2	**200**	**125**	M12	16	10.9	90 Nm
		140				
CDH2 / CGH2	**220**	**140**	M12	16	10.9	90 Nm
		160		24		
CDH2 / CGH2	**250**	**160**	M12	24	10.9	90 Nm
		180				
CDH2 / CGH2	**280**	**180**	M12	24	10.9	90 Nm
		200				
CDH2 / CGH2	**320**	**200**	M12	24	10.9	90 Nm
		220	M16	16		230 Nm

Blocked for new application / Für Neuanwendung gesperrt

Components: Series CDH2

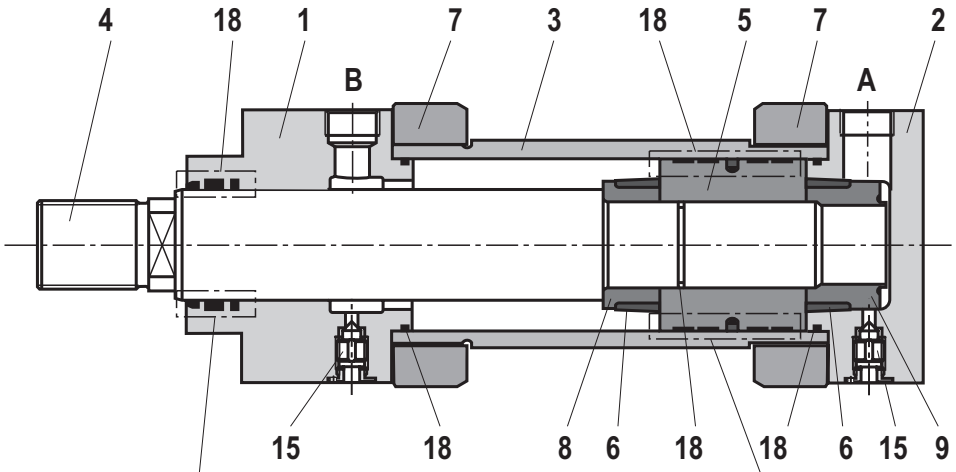

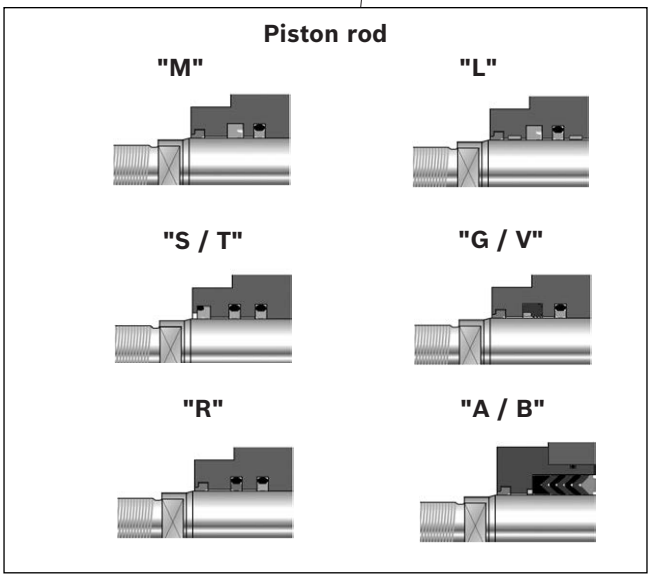

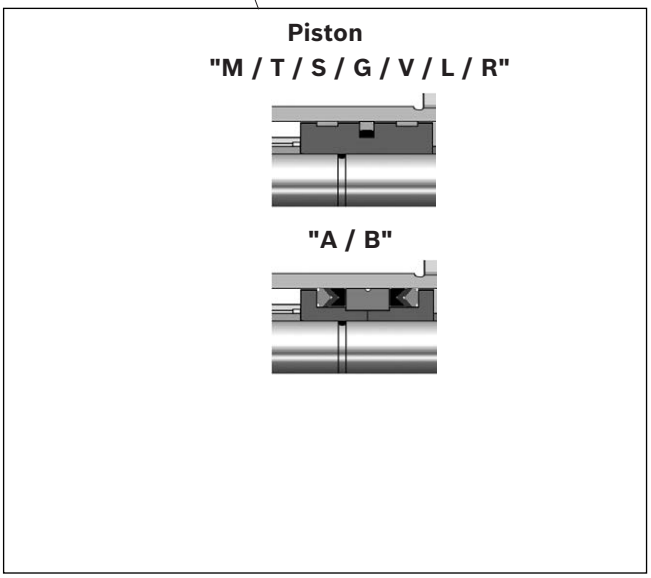



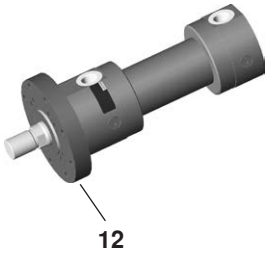

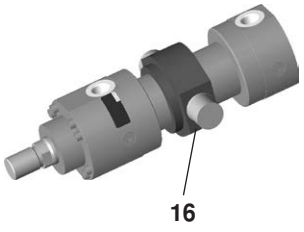





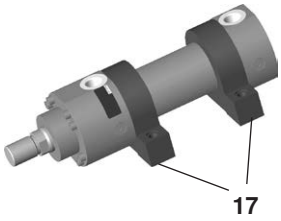

A Piston chamber
B Annulus area
1 Head
2 Base
3 Pipe
4 Piston rod
5 Piston
6 Damping bush
7 Flange
8 Socket
9 Socket
10 Base MP3
11 Base MP5
12 Round flange MF3
14 Round flange MF4
15 Bleeding
16 Trunnion MT4
17 Foot MS2
18 Seal kit:
Wiper
Rod seal
Piston seal
O-ring
Guide ring

Blocked for new application / Für Neuanwendung gesperrt

Components: Series CGH2

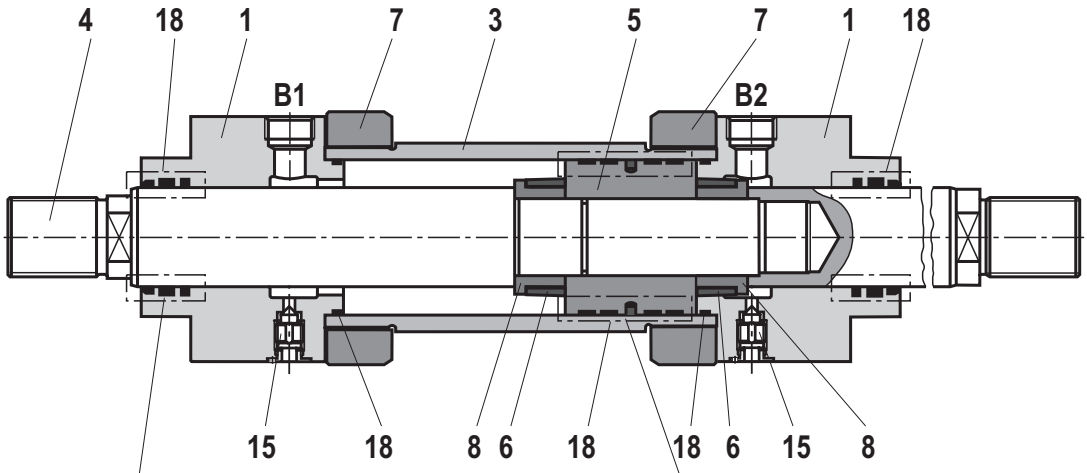

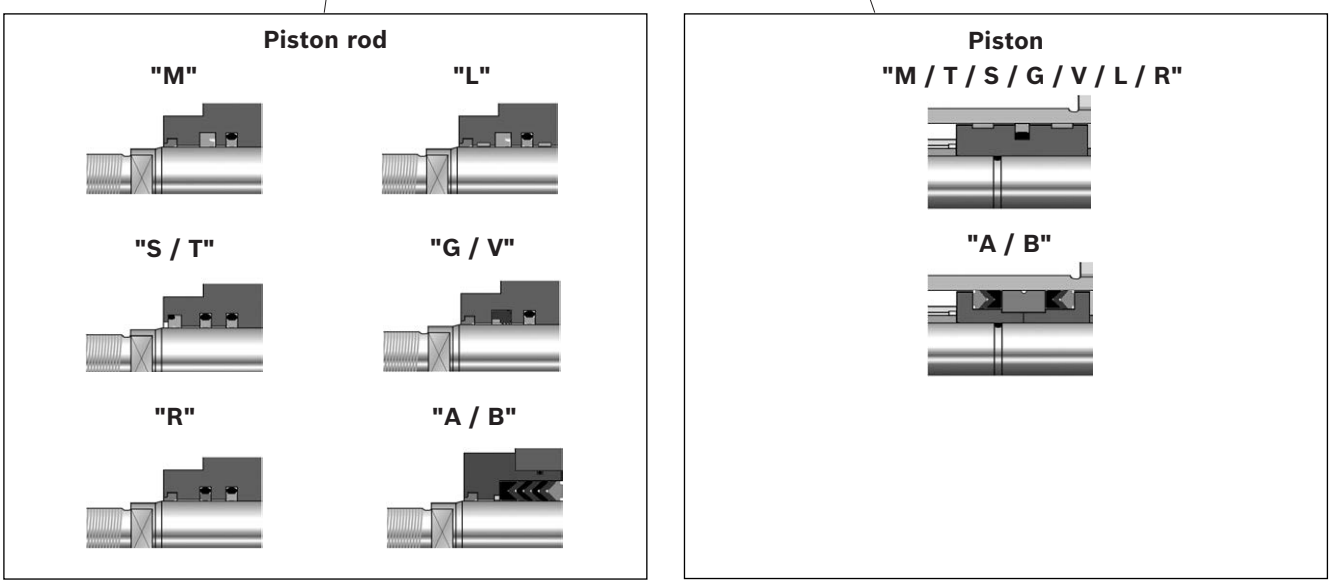

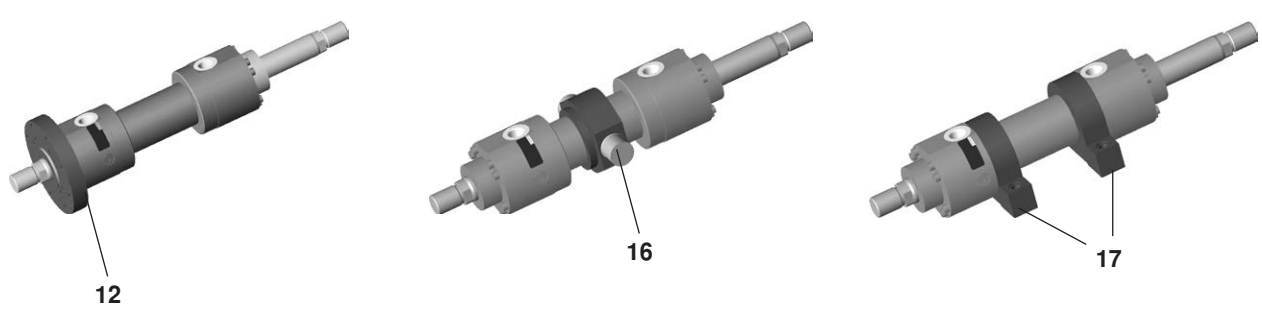

B1 Annulus area 1
B2 Annulus area 2
1 Head
3 Pipe
4 Piston rod
5 Piston
6 Damping bush
7 Flange
8 Socket

12 Round flange MF3
15 Bleeding
16 Trunnion MT4
17 Foot MS2
18 Seal kit:
- Wiper
- Rod seal
- Piston seal
- O-ring
- Guide ring

Blocked for new application / Für Neuanwendung gesperrt

Components: Series CSH2 MP3 and MP5

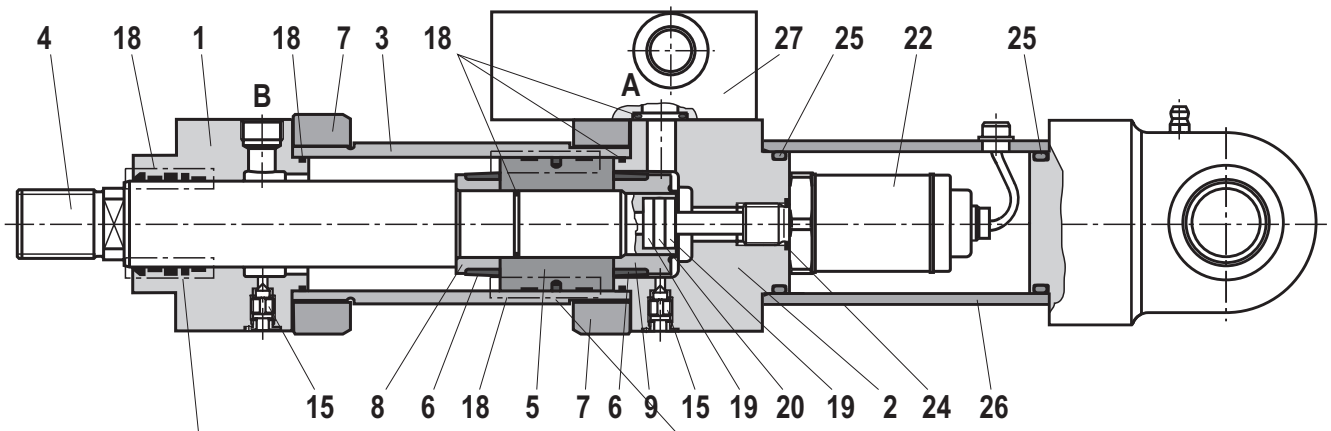

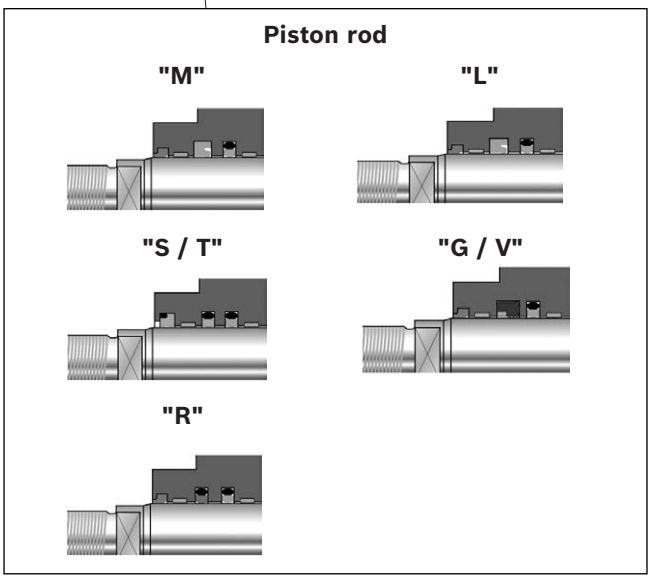

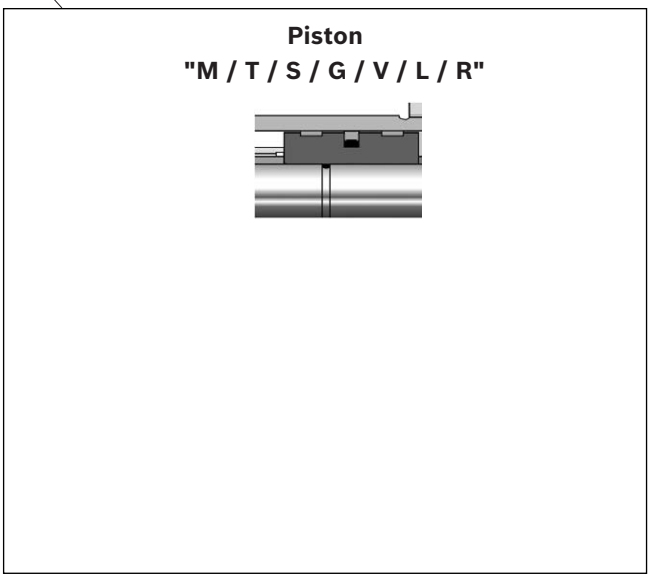





A Piston chamber
B Annulus area
1 Head
2 Base
3 Pipe
4 Piston rod
5 Piston
6 Damping bush
7 Flange
8 Socket
9 Socket
10 Base MP3
11 Base MP5
15 Bleeding
18 Seal kit:
Wiper
Rod seal
Piston seal
O-ring
Guide ring
19 Insulating socket
20 Solenoid
22 Position measurement system
24 Seal
25 Seal
26 Protective pipe
27 Subplate

Blocked for new application / Für Neuanwendung gesperrt

Components: Series CSH2 MF3, MF4, MT4 and MS2

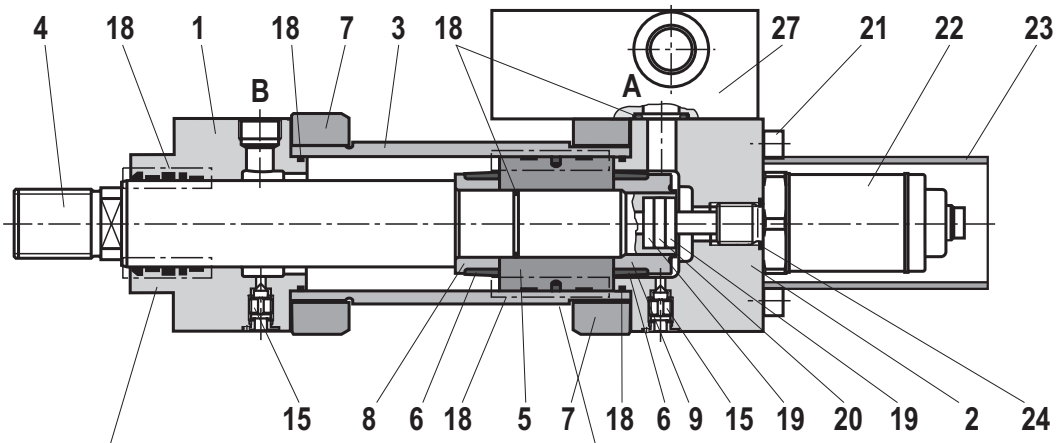

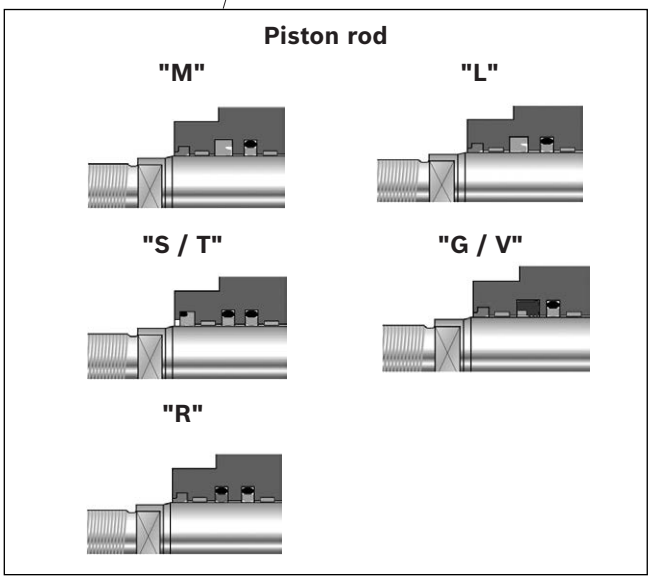

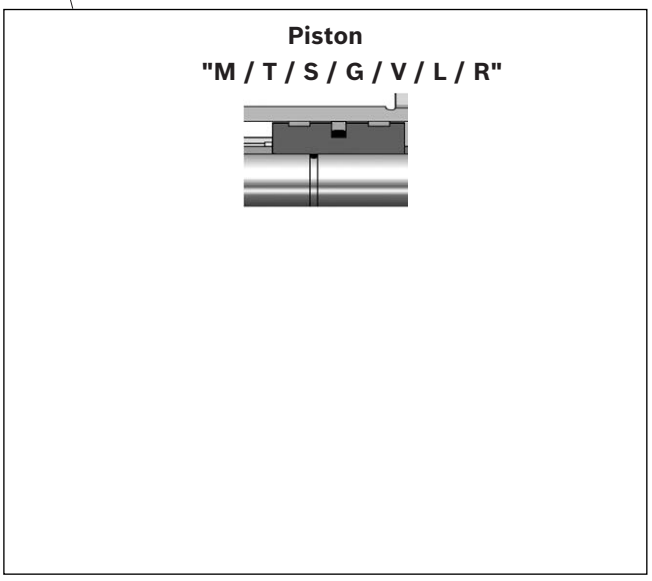

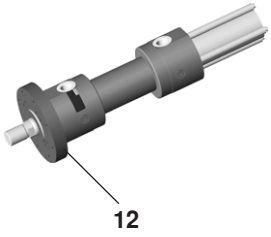

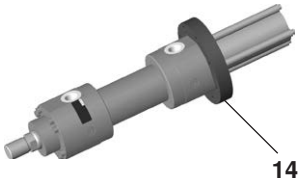

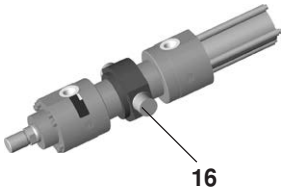

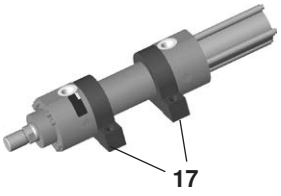

A Piston chamber
B Annulus area
1 Head
2 Base
3 Pipe
4 Piston rod
5 Piston
6 Damping bush
7 Flange
8 Socket
9 Socket
12 Round flange MF3
14 Round flange MF4
15 Bleeding
16 Trunnion MT4
17 Foot MS2
18 Seal kit:
Wiper
Rod seal
Piston seal
O-ring
Guide ring
19 Insulating socket
20 Solenoid
21 Hexagon socket head cap screws
22 Position measurement system
23 Protective pipe
24 Seal
27 Subplate

Blocked for new application / Für Neuanwendung gesperrt

Cylinder weight

Piston	Piston rod	CD/CS cylinder with 0 mm stroke length					per 100 mm stroke length	CG cylinder with 0 mm stroke length			per 100 mm stroke length
ØAL	**ØMM**	**MP3** [1] **MP5** [1]	**MP3** [2] **MP5** [2]	**MF3 MF4**	**MT4**	**MS2**		**MF3**	**MT4**	**MS2**	
mm	mm	kg	kg	kg	kg	kg	kg	kg	kg	kg	kg
40	**25**	7	12	9	9	9	0.9	10	10	10	1.3
	28	7	12	9	9	9	1.0	10	10	10	1.5
50	**32**	12	19.5	14	13	13	1.3	16	16	16	1.9
	36	12	19.5	14	13	14	1.5	16	16	16	2.3
63	**40**	20	29.5	21	21	21	2.3	25	25	25	3.3
	45	20	29.5	21	21	21	2.6	25	25	25	3.8
80	**50**	32	42.5	35	34	35	3.2	41	40	41	4.7
	56	32	42.5	35	34	36	3.6	41	40	42	5.5
100	**63**	51	64.5	54	54	55	5.2	63	63	64	7.6
	70	51	64.5	55	54	56	5.7	64	64	65	8.8
125	**80**	95	114	96	99	98	8.2	113	115	114	12.1
	90	96	115	97	100	99	9.2	115	117	116	14.2
140	**90**	131	157	132	136	137	10.7	155	158	159	15.7
	100	132	158	133	137	138	11.9	156	160	161	18.1
160	**100**	185	220	184	197	206	12.6	217	231	239	18.8
	110	186	221	186	199	207	13.9	220	233	242	21.4
180	**110**	255	303	253	264	274	14.7	294	305	314	22.1
	125	258	304	256	267	277	16.8	300	311	320	26.5
200	**125**	349	405	332	350	363	19.0	359	377	389	28.6
	140	352	406	335	353	366	21.5	365	383	396	33.5
220	**140**	527	625	512	546	518	27.1	604	638	610	39.1
	160						30.9				46.7
250	**160**	673	795	640	677	650	32.7	761	798	772	48.5
	180						36.9				56.9
280	**180**	976	1192	966	1020	918	44.2	1130	1183	1081	64.2
	200						48.8				73.4
320	**200**	1251	1512	1172	1223	1174	55.2	1354	1405	1356	79.8
	220						60.4				90.2

ØAL = piston Ø

ØMM = piston rod Ø

[1] Weight without position measurement system

[2] Weight with position measurement system

Blocked for new application / Für Neuanwendung gesperrt

Corrosivity categories

In this connection, observe the information on the color set-up on page 11 "Technical data".
The specified resistances of the individual Bosch Rexroth classes only refer to the primed / painted cylinder areas, not, for example, to piston rods, trunnions, etc.
In this connection, special measures may be necessary.

	Class	Certification by	Applications	
			Inside	Outside
Priming	CP3	240 h salt spray test SST (DIN EN ISO 9227) 240 h condensation water test KKT (DIN EN ISO 6270-2) Layer thickness: min. 40 µm	Field of application, e.g. Hall atmosphere, Air humidity ≤ 60%, no thermal load.	Not suitable for outdoor exposure.
Painting	CP4	480 h salt spray test SST. (DIN EN ISO 9227) 480 h condensation water test KKT (DIN EN ISO 6270-2) Nominal layer thickness: 120 µm	Unheated buildings in which there may be condensation (production rooms, storage and sport halls).	Urban and industrial atmosphere with little salt or sulfur dioxide load.
	CP5	720 h salt spray test SST (DIN EN ISO 9227) 480 h condensation water test KKT (DIN EN ISO 6270-2) Nominal layer thickness: 140 µm	Silo and debris facilities, chemical plants, boathouses above sea water, laundries, breweries with high humidity and medium contamination.	Industrial and coastal areas with medium salt load.
	CP6	1000 h salt spray test NSS (DIN EN ISO 9227) 480 h condensation water test KKT (DIN EN ISO 6270-2) Nominal layer thickness: 220 µm	Buildings or areas with almost permanent condensation and serious contamination.	Industrial areas with large humidity and aggressive atmosphere.
	CP7	1440 h salt spray test NSS (DIN EN ISO 9227) 720 h condensation water test KKT (DIN EN ISO 6270-2) Nominal layer thickness: 320 µm	Buildings or areas with almost permanent condensation and with serious contamination.	Coastal and offshore areas with high salt load.

Blocked for new application / Für Neuanwendung gesperrt

Bosch Rexroth AG
Industrial Hydraulics
Zum Eisengießer 1
97816 Lohr am Main, Germany
Phone +49 (0) 93 52 / 40 30 20
my.support@boschrexroth.de
www.boschrexroth.de

© All rights reserved to Bosch Rexroth AG, also regarding any disposal, exploitation, reproduction, editing, distribution, as well as in the event of applications for industrial property rights.
The data specified above only serve to describe the product. No statements concerning a certain condition or suitability for a certain application can be derived from our information. The information given does not release the user from the obligation of own judgment and verification.
It must be remembered that our products are subject to a natural process of wear and aging.

Bosch Rexroth AG, RE 17335, edition: 2021-07