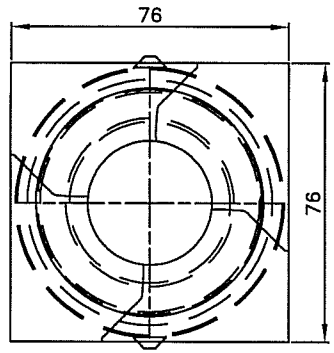

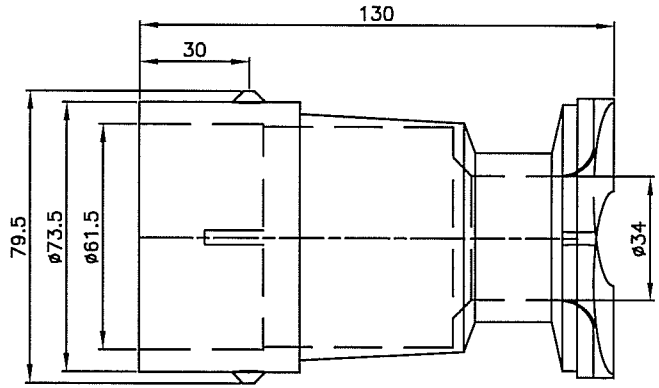

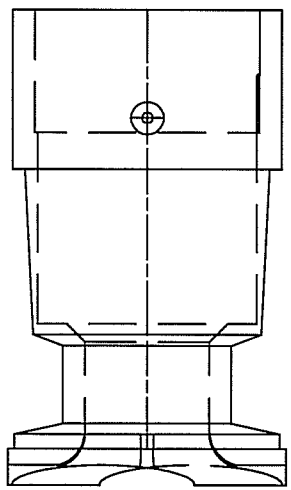

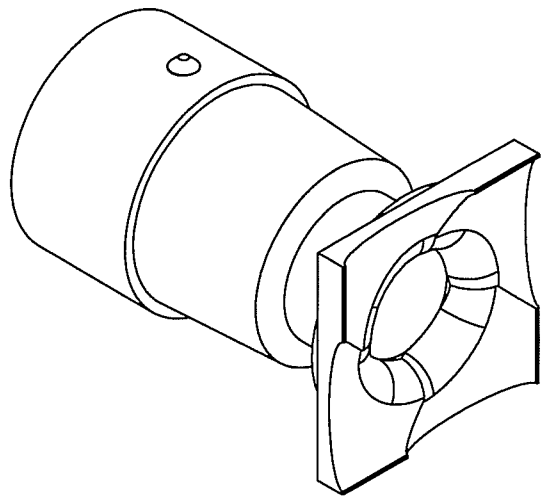

	010515		1:1	70 202 150
	LCA		A2	
	OCT			VESTAS
5 OCT 02	Dyse P20.xx			

F:\DWG\5\OCT\02\70202150r0.dwg